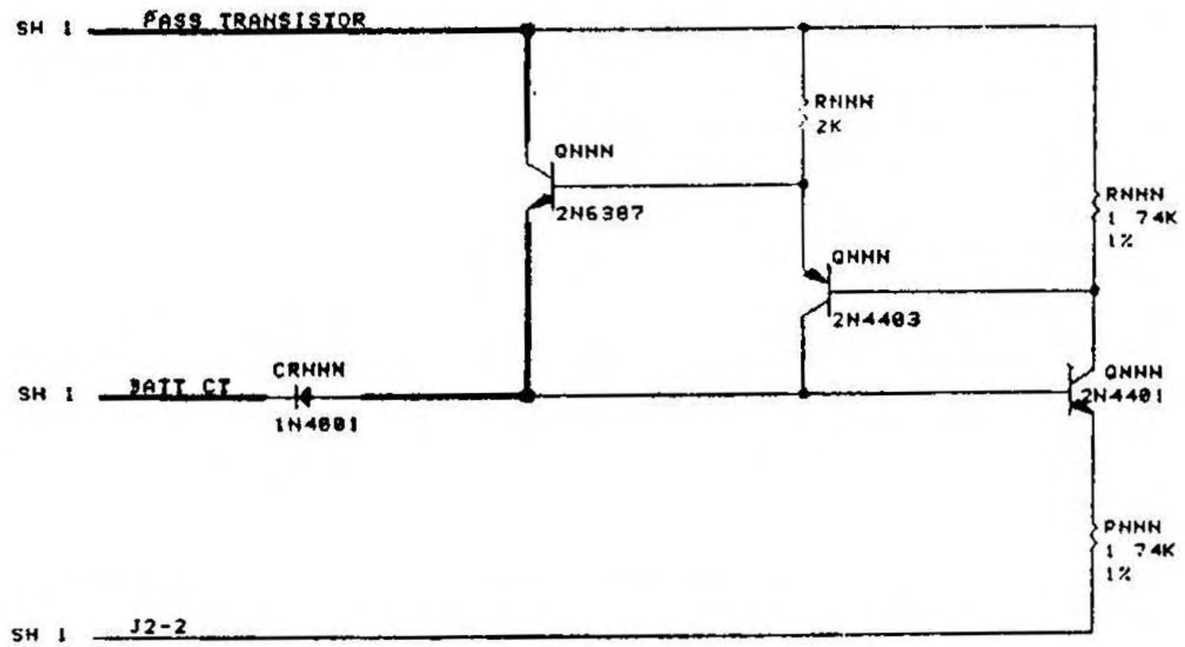

ANDROBOT, INC.

TITLE
TOPO BATTERY MONITOR

SIZE	CODE	NUMBER	REV
B		11-010175-001	A

DATE 10/18/93 SHEET 2 OF 3

REVISIONS				
ZONE	LTR	DESCRIPTION	DATE	APVD
	A	[illegible]	[illegible]	[illegible]
	B	[illegible]	[illegible]	[illegible]

IC TABLE

IC TYPE	REF DESIGNATOR	QTY	+5V	GND	-5V	+12	+24
8031	U8	1	40	20			
2764	U9	1	26	14			
6116	U7	1	24	12			
4013	U6	1	14	07			
4071	U4.U10	2	14	07			
4584	U3	1	14	07			
74LS00	U11	1	14	07			
74LS05	U12	1	14	07			
74LS373	U5	1	20	10			
LM324	U1.U2	2	04	11			
LM7805	VR1	1	03	02		01	
SG3635	Q1.Q2.Q3.Q4	4					01

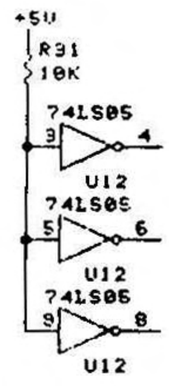

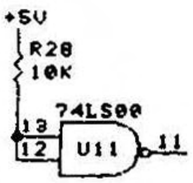

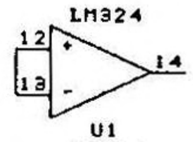

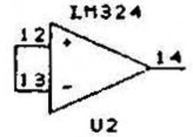

MAR 28 1984

PRE-PRODUCTION RELEASE

NOTE

1 ALL BYPASS CAPACITORS ARE .1UF IN VALUE.
2 DESIGNATORS FOR CAPS ARE C14 THRU C23.

DATE	3/22/84
DWN	JS
APVD	
APVD	
ENGRG	
CHKR	

ANDROBOT, INC.

TITLE: TOPO II, MOTION CONTROL CPU
COVER SHEET

SIZE	CODE	NUMBER	REV
B		11-810200-001	B

SHEET 1 OF 6

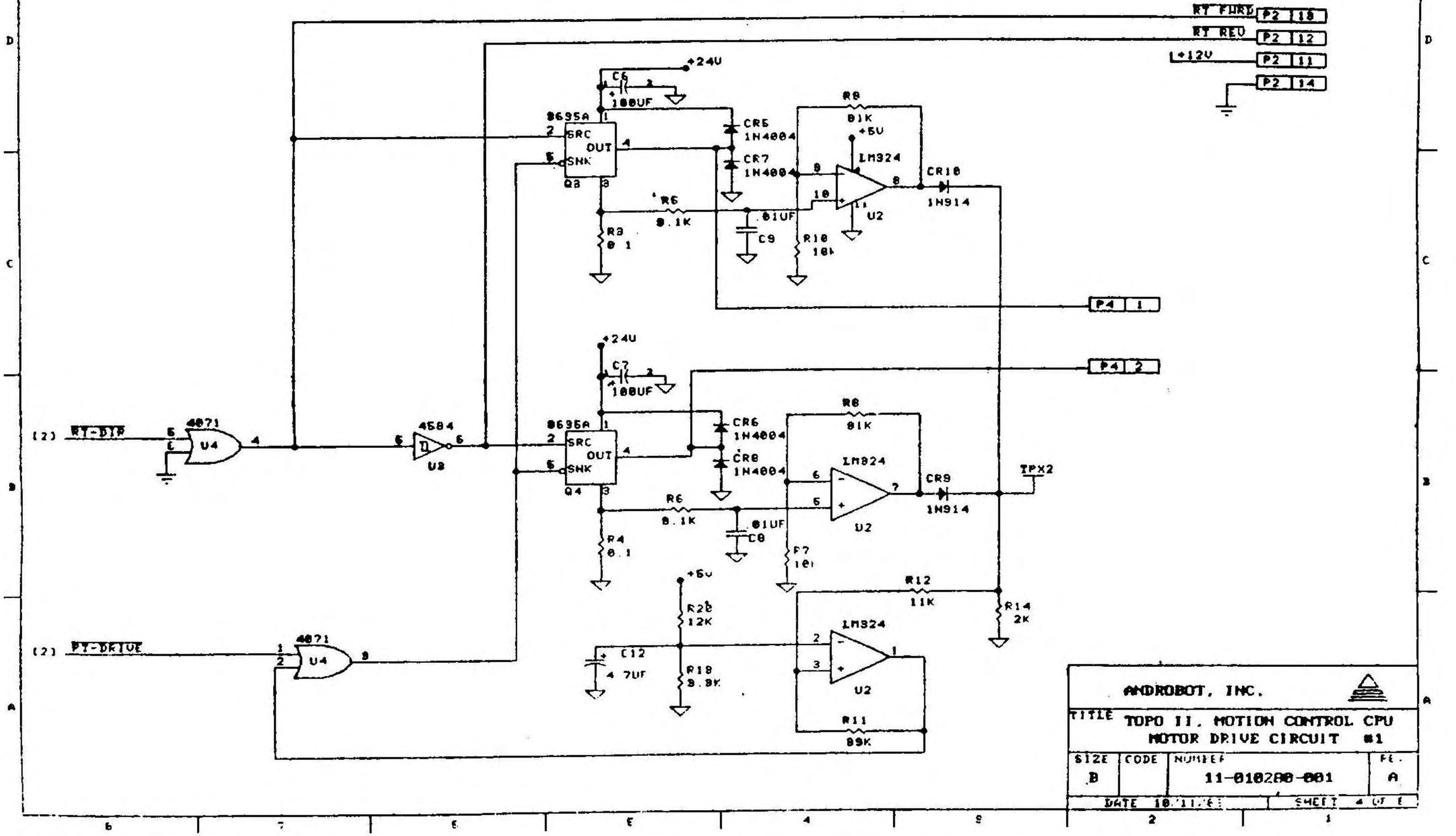
RT FWRD
P2 15
RT REV
P2 12
+12V
P2 11
P2 14
+24U
C6
100UF
8695A
SRC
OUT
SNK
Q8
CR5
1N4004
CR7
1N4004
R8
81K
+5U
LM324
U2
CR10
1N914
R6
8.1K
.01UF
C9
R10
10K
R3
0.1
P4 1
+24U
C7
100UF
P4 2
(2) RT-DIR
4071
U4
4584
U8
8695A
SRC
OUT
SNK
Q4
CR6
1N4004
CR8
1N4004
R8
81K
LM324
U2
CR9
1N914
TPX2
R6
8.1K
.01UF
C8
R4
0.1
R7
10K
+5U
R12
11K
R14
2K
R20
12K
C12
4.7UF
R18
8.8K
LM324
U2
R11
88K
(2) RT-DRIVE
4071
U4
ANDROBOT, INC.
TITLE TOPO II, MOTION CONTROL CPU
MOTOR DRIVE CIRCUIT #1
SIZE B
CODE
NUMBER 11-010200-001
REV A
DATE 10/11/85
SHEET 4 OF 5

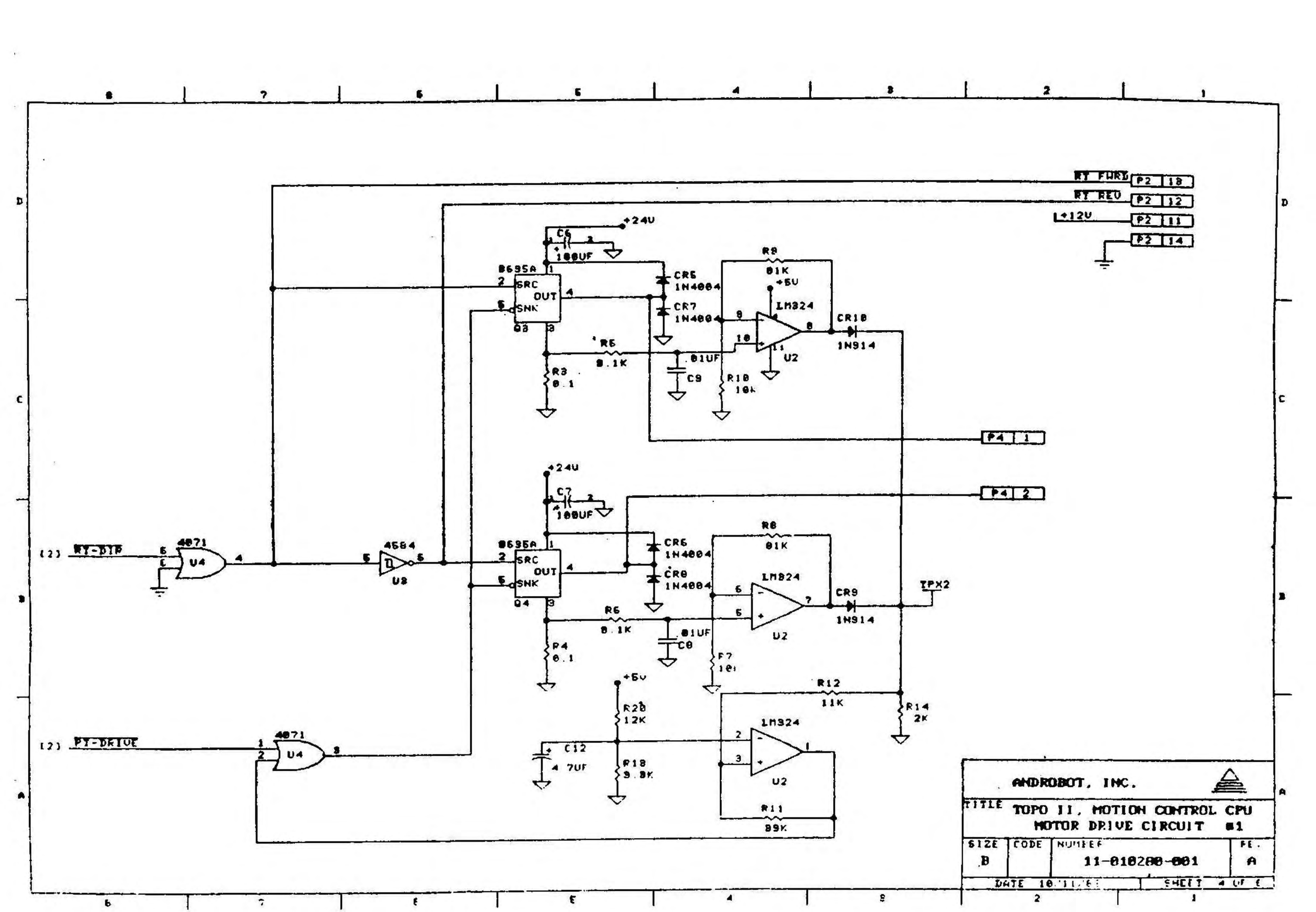

ANDROBOT, INC.			
TITLE: TOPO II, MOTION CONTROL CPU MOTOR DRIVE CIRCUIT #1			
SIZE: B	CODE:	NUMBER: 11-010200-001	REV: A
DATE: 10/11/85		SHEET 4 OF 6	

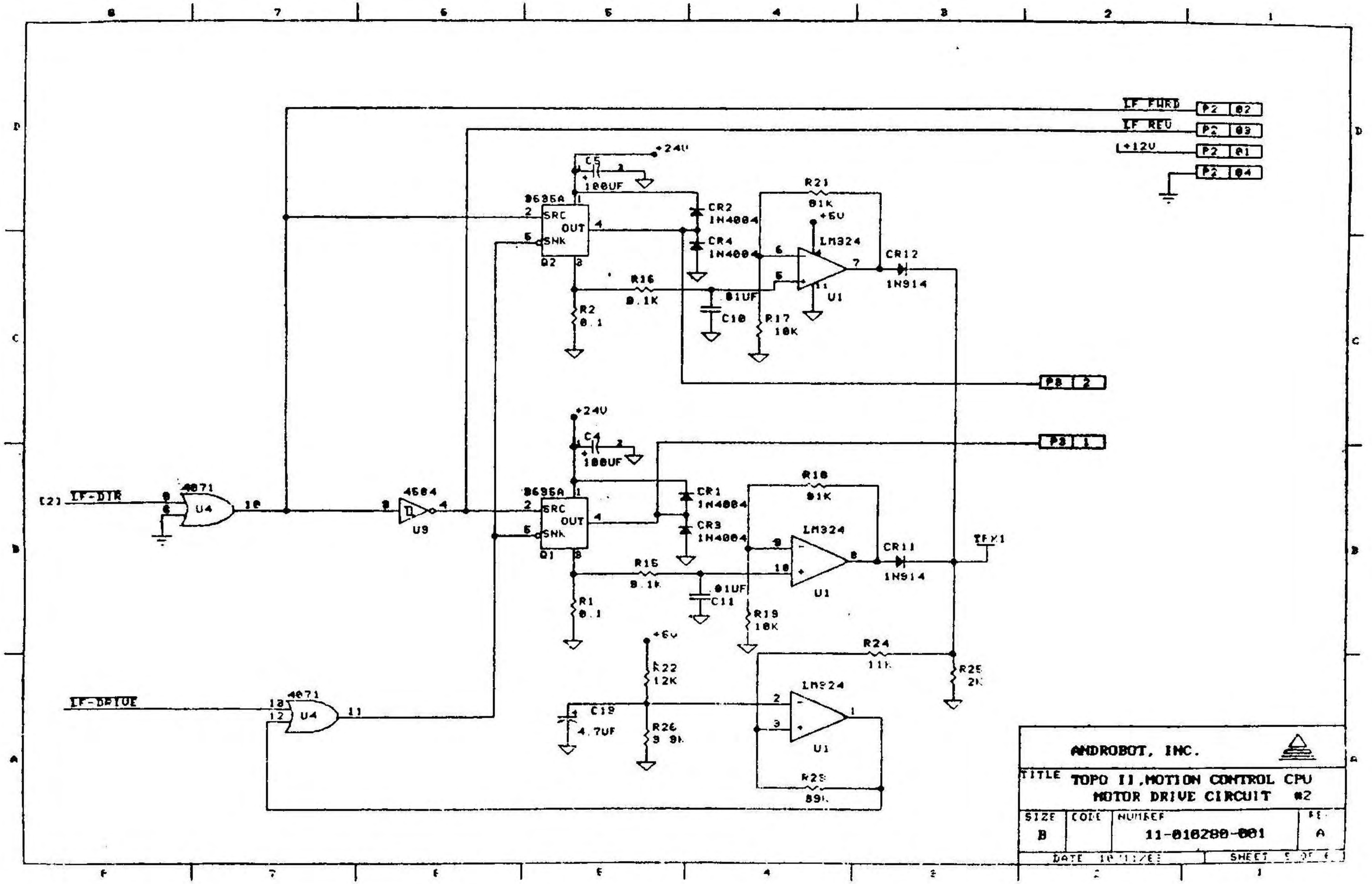
IF FWRD
IF REV
+12V
P2 02
P2 03
P2 01
P2 04
+24V
C5
100UF
9636A
SRC
OUT
SNK
Q2
CR2
1N4004
CR4
1N4004
R21
81K
+5V
LM324
CR12
1N914
R16
8.1K
.01UF
C10
R17
10K
U1
R2
8.1
P8 2
+24V
C4
100UF
P3 1
[2] IF-DIR
4071
U4
4504
U9
9636A
SRC
OUT
SNK
Q1
CR1
1N4004
CR3
1N4004
R18
81K
LM324
CR11
1N914
TEX1
R15
8.1K
.01UF
C11
R19
10K
U1
R1
8.1
+5V
R22
12K
R24
11K
R25
2K
IF-DRIVE
4071
U4
C19
4.7UF
R26
8.9K
LM324
U1
R23
89K
ANDROBOT, INC.
TITLE TOPO II, MOTION CONTROL CPU
MOTOR DRIVE CIRCUIT #2
SIZE B
CODE
NUMBER 11-016280-001
REV A
DATE
SHEET 5 OF 6

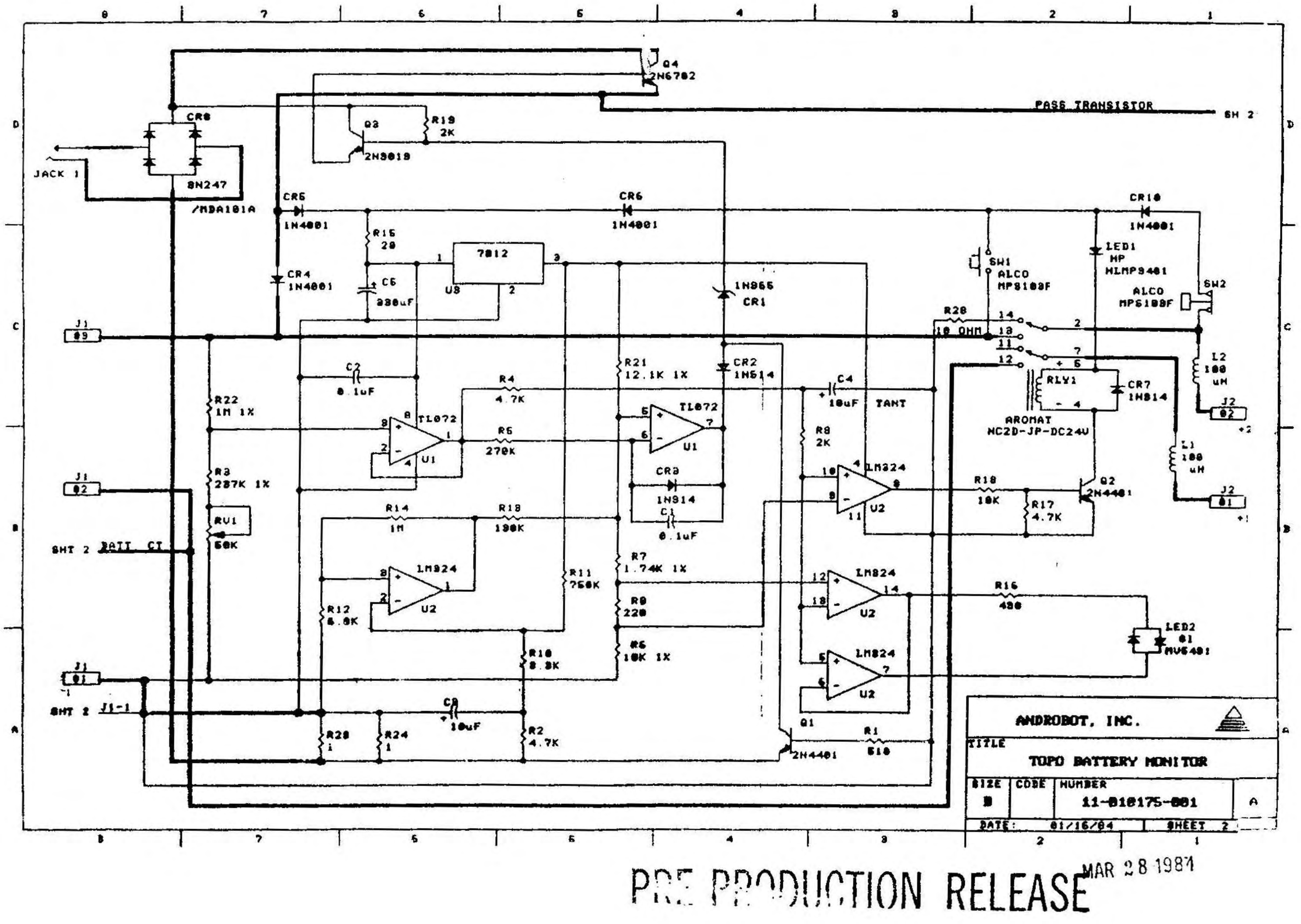

PRE PRODUCTION RELEASE

MAR 28 1984

REVISIONS				
ZONE	LTR	DESCRIPTION	DATE	APVD

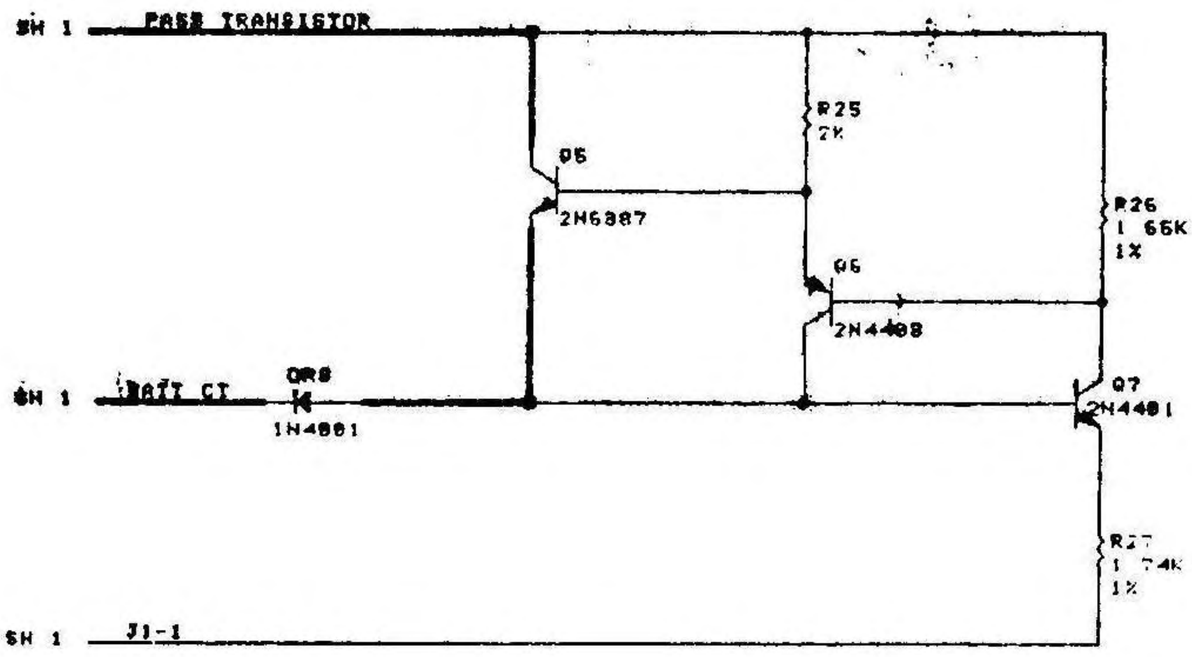

DATE	12/05/8[illegible]
DWN	J. YOUNG
APVD	
APVD	
ENGR'G	
CHK'D	

ANDROBOT, INC.

TITLE

TOPO BATTERY MONITOR

SIZE	DWG. NO.	REV
B	11-01817[illegible]-001	D

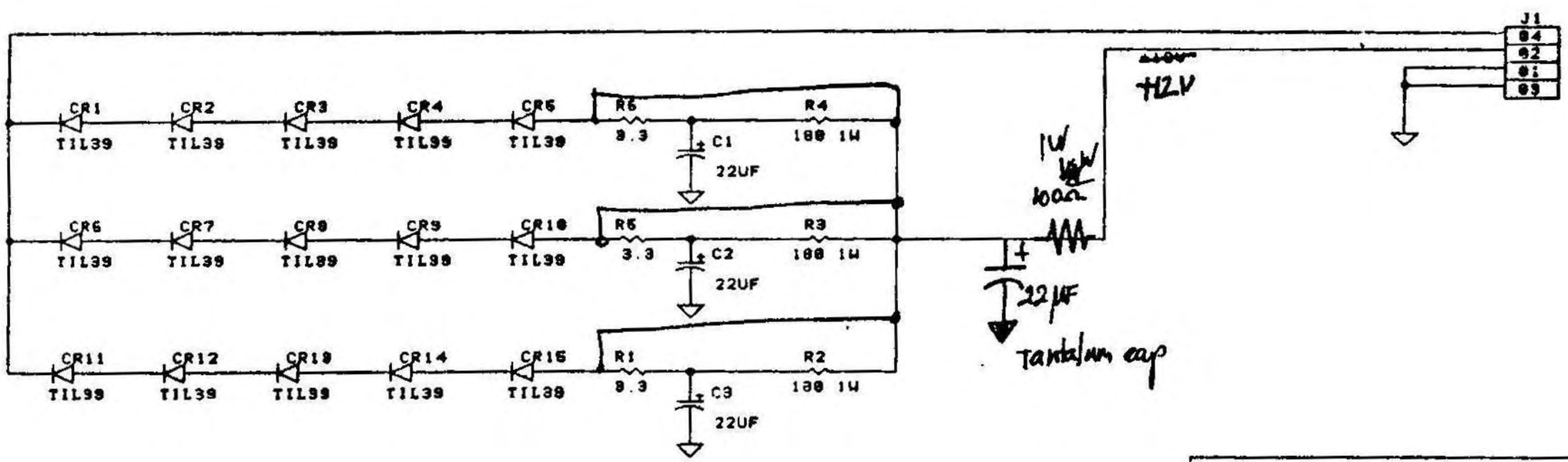

ANDROBOT, INC.			
TITLE: MOBILE TRANCEIVER SENSOR			
SIZE: B	CODE:	NUMBER: 11-010369-001	REV: A
DATE: 10/10/83		SHEET 1 OF 1	

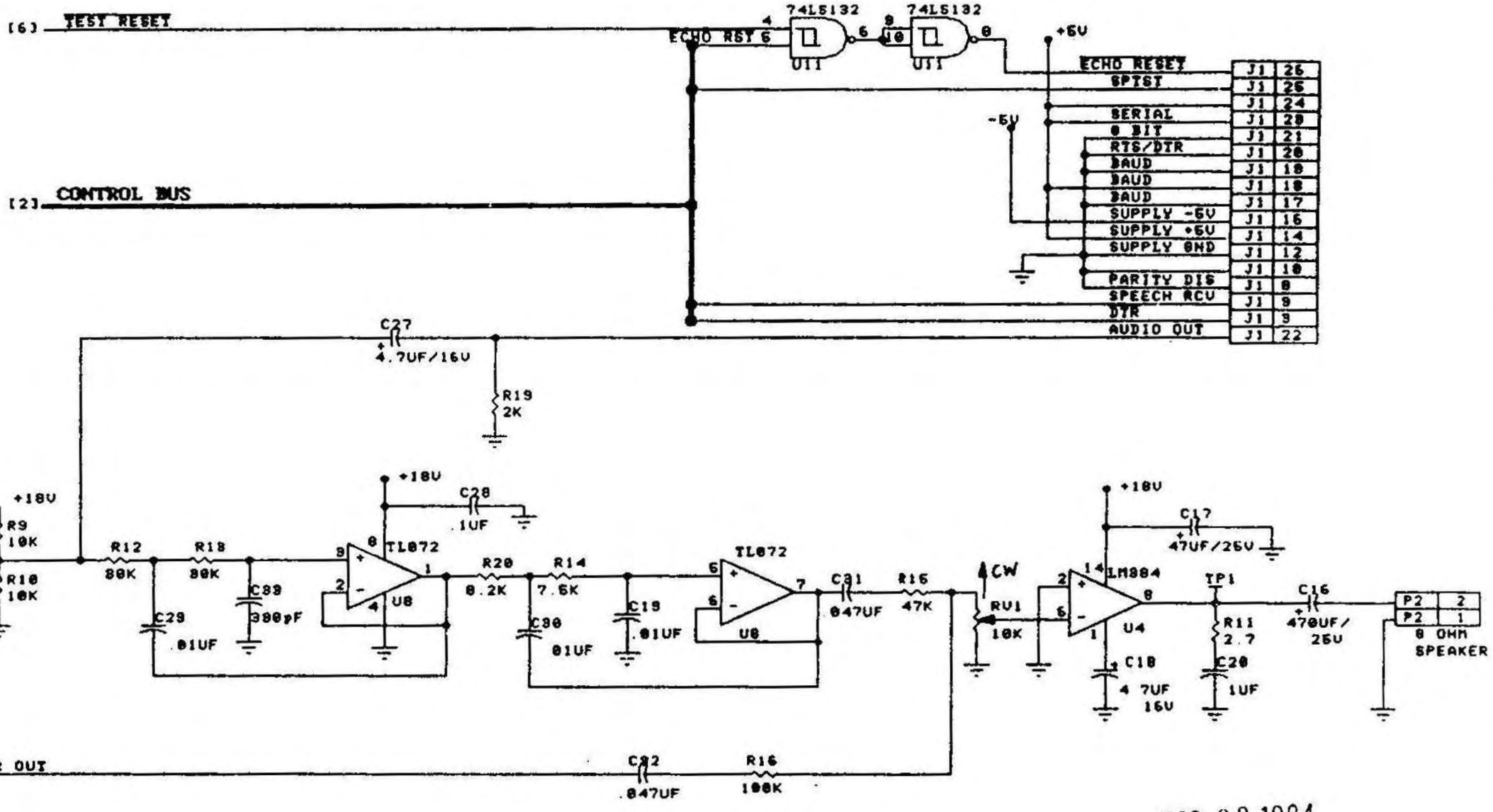

MAR 28 1984

PRE-PRODUCTION RELEASE

ANDROBOT, INC.			
TITLE: TOPO II COMMUNICATION BD ECHO SPEECH MODULE INTERFACE			
SIZE: B	CODE:	NUMBER: 11-810281-001	REV: A
DATE: 12/28/83		SHEET 4 OF 1	

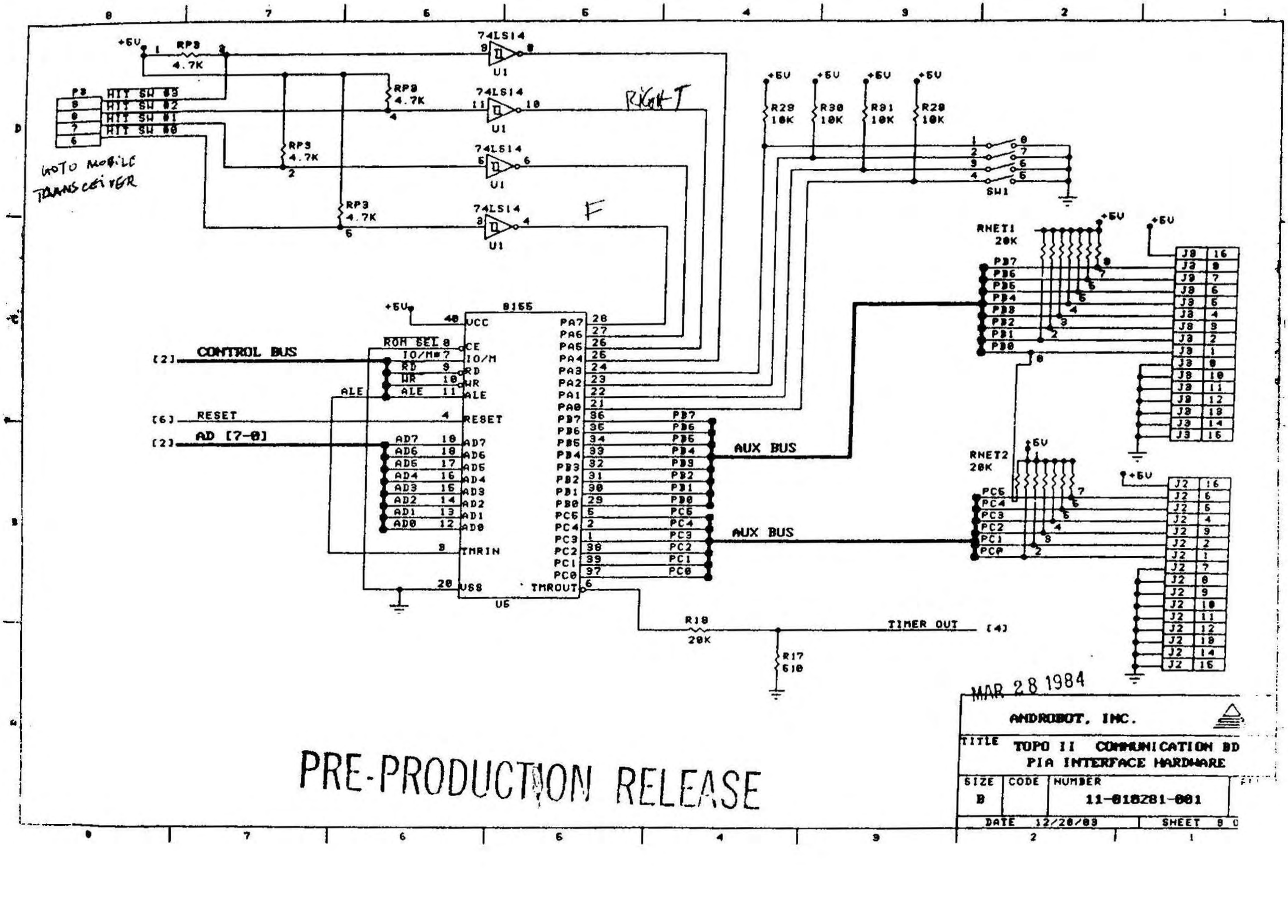
+5V
RP3
4.7K
74LS14
U1
P3
HIT SW #3
HIT SW #2
HIT SW #1
HIT SW #0
GOTO MOBILE TRANSCEIVER
RIGHT
F
R29 10K
R30 10K
R31 10K
R28 10K
SW1
RNET1 20K
RNET2 20K
8155
CONTROL BUS
RESET
AD [7-0]
ALE
AUX BUS
TIMER OUT
R18 20K
R17 610
U6
PRE-PRODUCTION RELEASE
MAR 28 1984
ANDROBOT, INC.
TITLE TOPO II COMMUNICATION BD
PIA INTERFACE HARDWARE
SIZE B
CODE
NUMBER 11-818281-001
DATE 12/28/83
SHEET 8

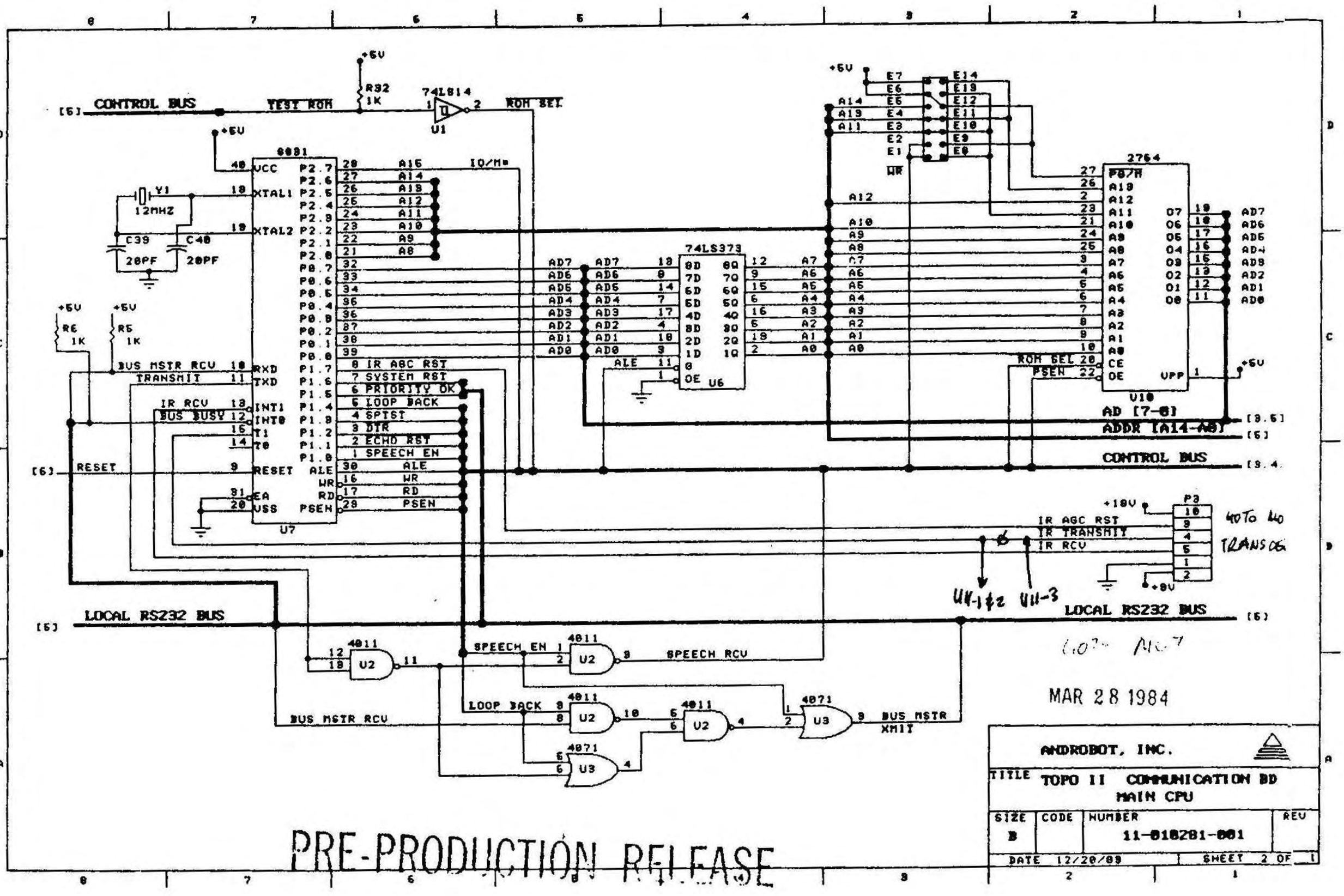
CONTROL BUS
TEST ROM
R32 1K
74LS14
U1
ROM SEL
+5V
8031
Y1
12MHZ
C39 20PF
C40 20PF
R6 1K
R5 1K
BUS MSTR RCV
TRANSMIT
IR RCV
BUS BUSY
RESET
LOCAL RS232 BUS
P2.7 A15
P2.6 A14
P2.5 A13
P2.4 A12
P2.3 A11
P2.2 A10
P2.1 A9
P2.0 A8
IO/M
ALE
WR
RD
PSEN
8 IR AGC RST
7 SYSTEM RST
6 PRIORITY OK
5 LOOP BACK
4 SPTST
3 DTR
2 ECHO RST
1 SPEECH EN
74LS373
U6
2764
U10
AD [7-0]
ADDR [A14-A0]
CONTROL BUS
ROM SEL
PSEN
P3
+10V
IR AGC RST
IR TRANSMIT
IR RCV
40 TO 40 TRANSOG
4011 U2
4071 U3
SPEECH EN
SPEECH RCV
LOOP BACK
BUS MSTR RCV
BUS MSTR XMIT
MAR 28 1984
ANDROBOT, INC.
TITLE TOPO II COMMUNICATION BD MAIN CPU
SIZE B
CODE
NUMBER 11-818281-001
REV
DATE 12/20/83
SHEET 2 OF 1
PRE-PRODUCTION RELEASE

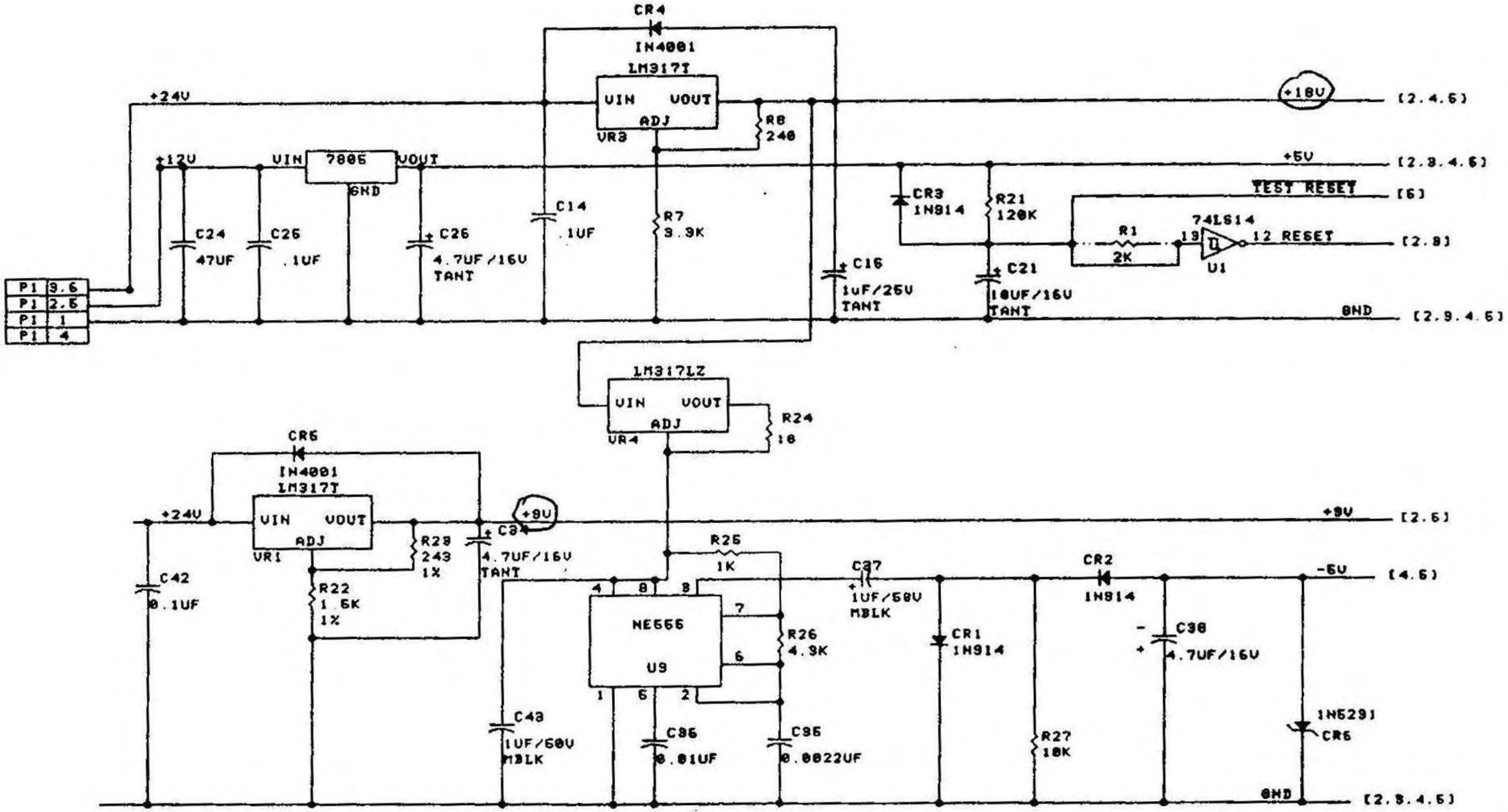

NOTES

1. IF R1 IS INSTALLED THEN THE TRACE ON CIRCUIT SIDE OF BOARD MUST BE CUT BETWEEN SOLDER PADS OF R1 (SEE NOTE ON ASSEMBLY DWG. FOR EXACT PLACE OF CUT)

MAR 28 1984

ANDROBOT, INC.

TITLE	TOPO II COMMUNICATION BI POWER SUPPLY & RESET		
SIZE B	CODE	NUMBER 11-810281-001	REV
DATE 12/28/83		SHEET 6 OF 1	

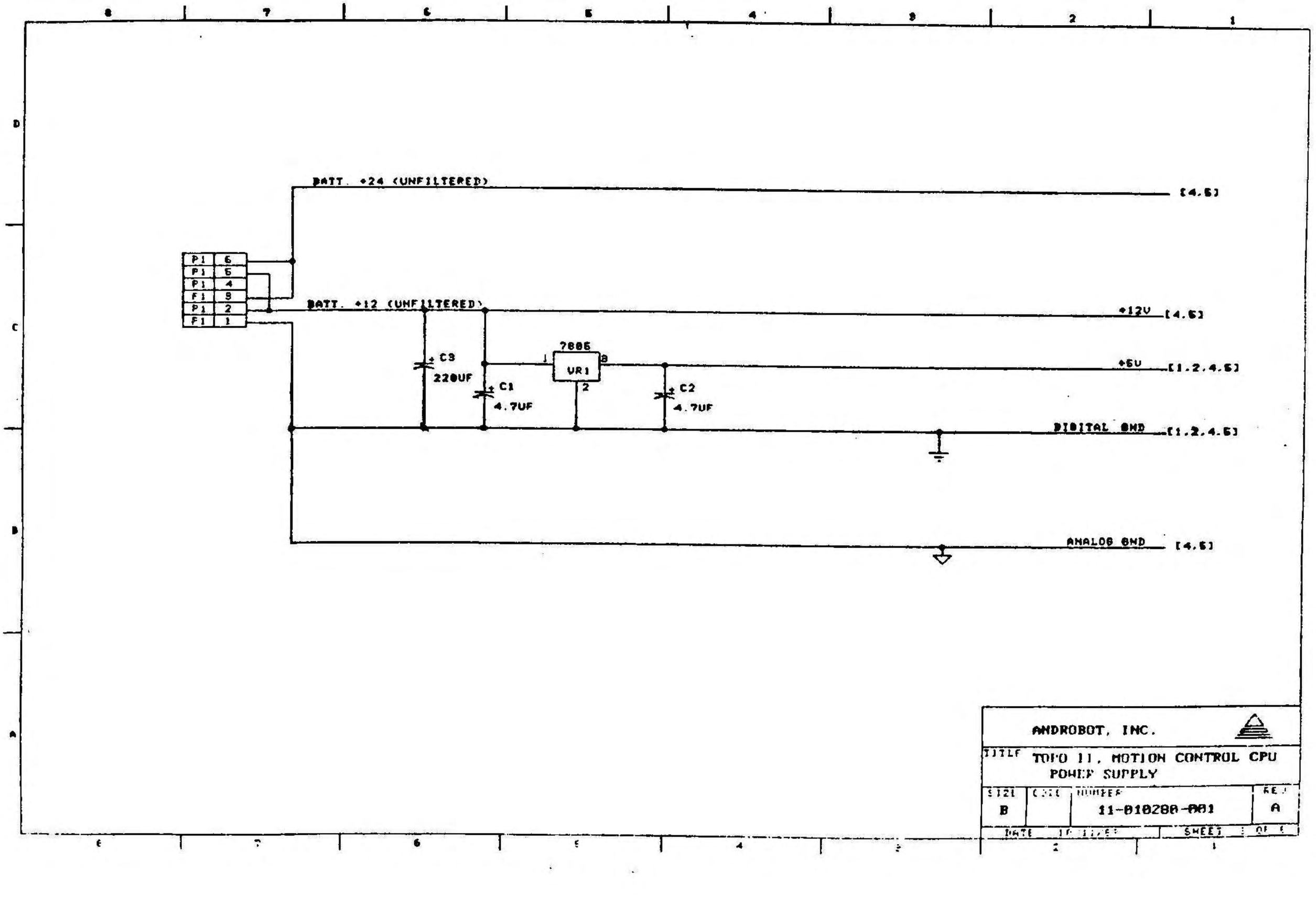

BATT. +24 (UNFILTERED)
[4.5]
P1 6
P1 5
P1 4
F1 3
P1 2
F1 1
BATT. +12 (UNFILTERED)
+12V [4.5]
C3
220UF
C1
4.7UF
7805
VR1
C2
4.7UF
+5V [1.2.4.5]
DIGITAL GND [1.2.4.5]
ANALOG GND [4.5]
ANDROBOT, INC.
TITLE TOPO II, MOTION CONTROL CPU POWER SUPPLY
SIZE B
NUMBER 11-010280-001
REV A
DATE
SHEET

REVISIONS				
ZONE	LTR	DESCRIPTION	DATE	APVD

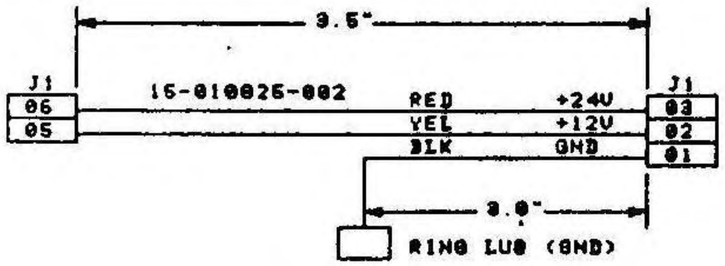

DATE	10/20/89
DWN	T. SAKAMOTO
APVD	
APVD	
ENGRG	
CHKR	

ANDROBOT, INC.

TITLE: TOPO II
POWER DISTRIBUTION HARNESS ASS'Y

SIZE	CODE	NUMBER	REV
B		15-010825-002	A

SHEET 2 OF 2

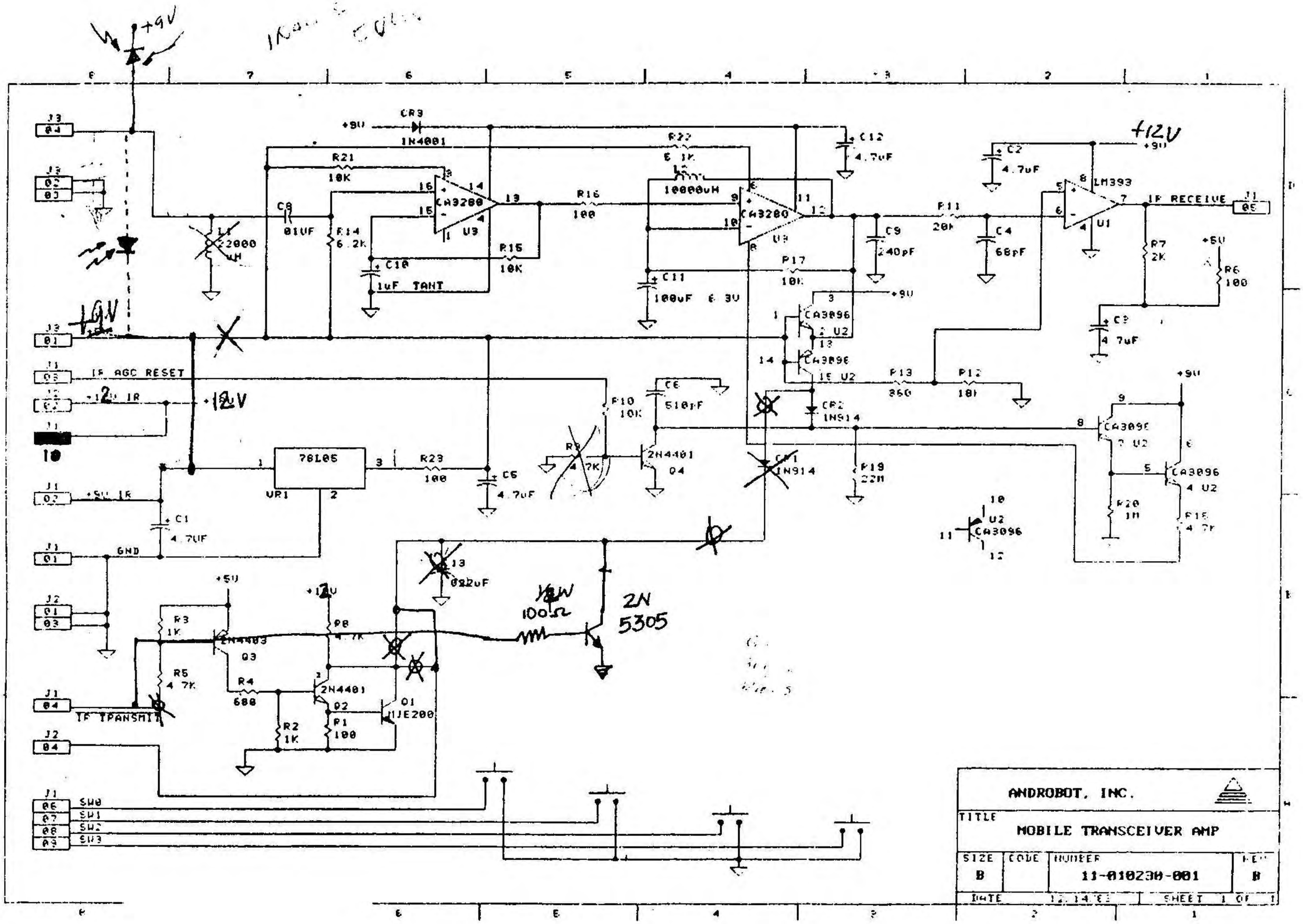

ANDROBOT, INC.			
TITLE: MOBILE TRANSCEIVER AMP			
SIZE: B	CODE:	NUMBER: 11-010230-001	REV: B
DATE: 12.14.88		SHEET 1 OF 1	

+9V

+12V

+12V

+12V

+12V

+9V

+5V

+5V

+9V

+9V

+9

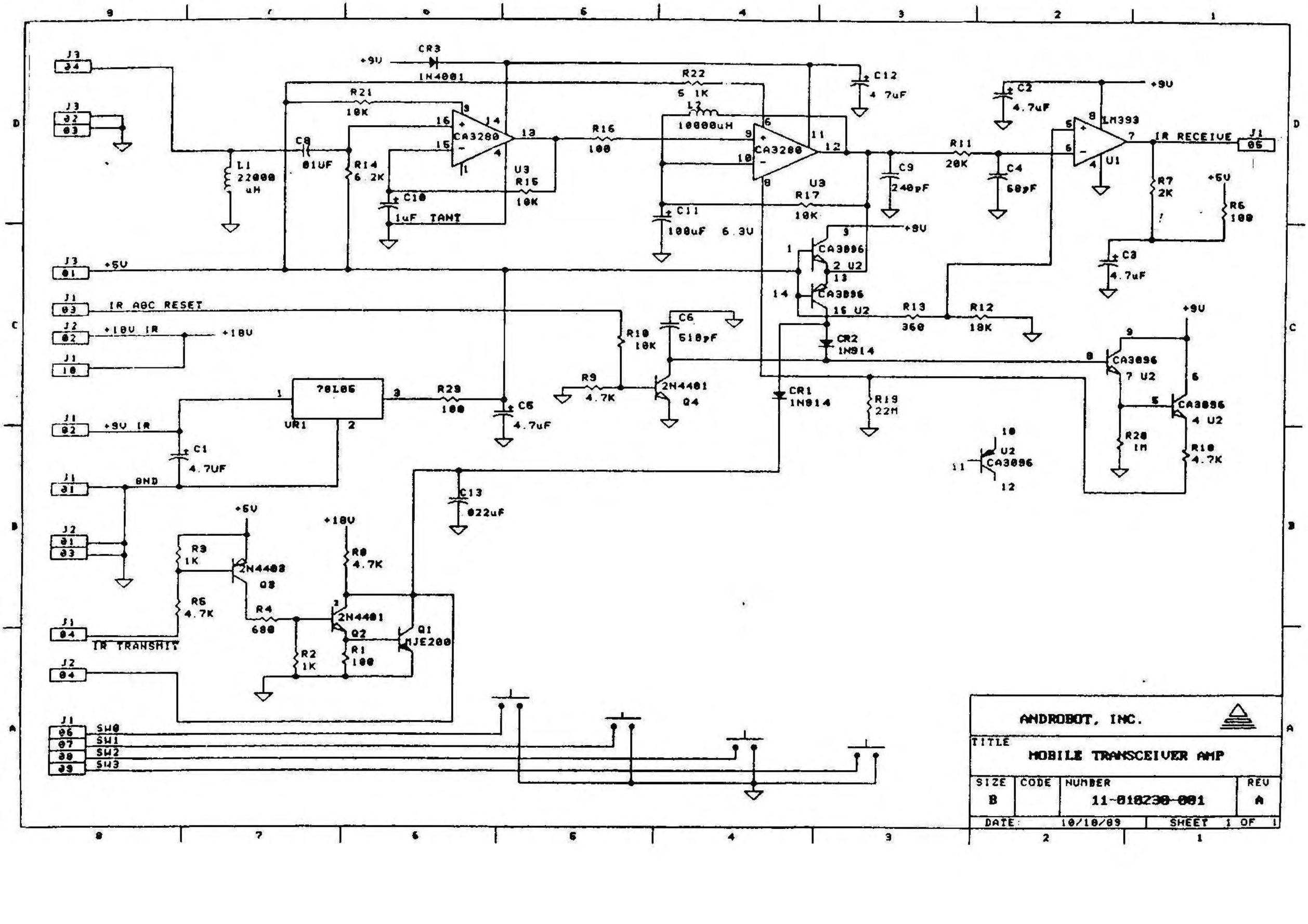

J3 04
J3 02 03
J3 01 +5V
J1 03 IR AGC RESET
J2 02 +18V IR
J1 10 +18V
J1 02 +9V IR
J1 01 GND
J2 01 03
J1 04 IR TRANSMIT
J2 04
J1 06 SW0
07 SW1
08 SW2
09 SW3
+9V
CR3 1N4001
R21 10K
C8 01UF
L1 22000 uH
R14 6.2K
C10 1uF TANT
CA3280
U3
R15 10K
R16 100
R22 5.1K
L2 10000uH
C11 100uF 6.3V
R17 10K
C12 4.7uF
C9 240pF
R11 20K
C4 60pF
C2 4.7uF
LM393
U1
IR RECEIVE
J1 05
R7 2K
+5V
R6 100
C3 4.7uF
CA3096
2 U2
15 U2
R13 360
R12 18K
CR2 1N914
CR1 1N914
R19 22M
R10 10K
C6 510pF
R9 4.7K
2N4401 Q4
78L05
VR1
R23 100
C5 4.7uF
C1 4.7UF
C13 .022uF
R3 1K
2N4403 Q3
R5 4.7K
R4 680
R2 1K
R0 4.7K
2N4401 Q2
R1 100
Q1 MJE200
CA3096 7 U2
CA3096 4 U2
R20 1M
R10 4.7K
U2 CA3096
ANDROBOT, INC.
TITLE
MOBILE TRANSCEIVER AMP
SIZE B
CODE
NUMBER 11-010230-001
REV A
DATE: 10/10/89
SHEET 1 OF 1

REVISIONS			
LTR	DESCRIPTION	DATE	APPVL
A	PRE-PROD REL. ECO 00020	10-26-83	LH
B	REVISE PER ECO 00030. SHT 2. ZONE B12	11-02-83	LH
C	RELOCATE 9 PIN CONN. ECO 00036	11-09-83	LH
D	REV SHT 2. ECO 00054	11-30-83	J. YOUNG
E	REVISED PER ECO 00092	1-30-84	QR

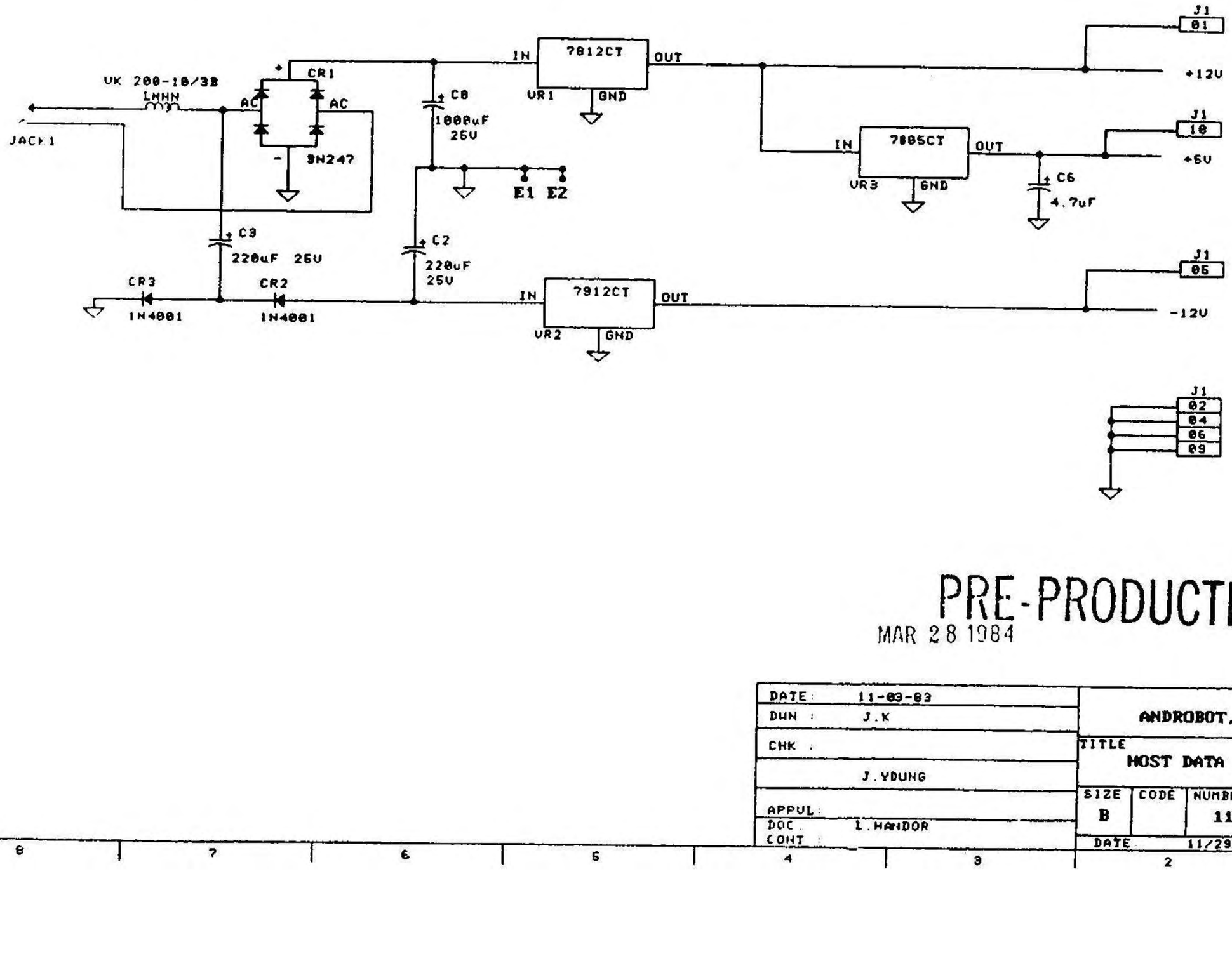

PRE-PRODUCTION RELEASE

MAR 28 1984

DATE: 11-03-83	ANDROBOT, INC.
DWN: J.K	
CHK: J.YOUNG	TITLE: HOST DATA LINK DIGITAL
APPVL:	SIZE: B; CODE: ; NUMBER: 11-810233-001; REV: E
DOC CONT: L.MANDOR	DATE: 11/29/83; SHEET 1 OF 2

PRE-PRODUCTION RELEASE

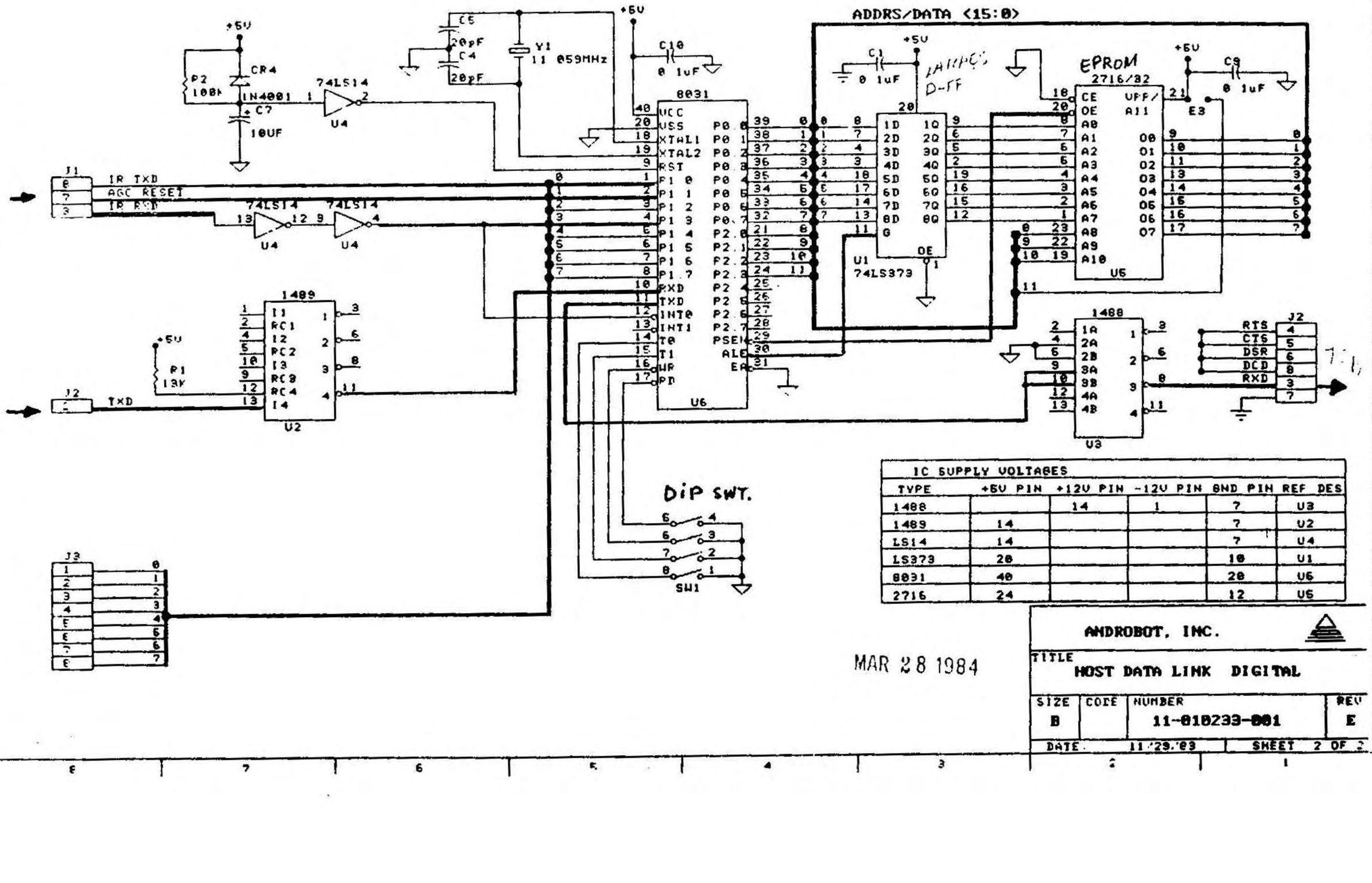

IC SUPPLY VOLTAGES					
TYPE	+5V PIN	+12V PIN	-12V PIN	GND PIN	REF DES
1488		14	1	7	U3
1489	14			7	U2
LS14	14			7	U4
LS373	20			10	U1
8031	40			20	U6
2716	24			12	U5

MAR 28 1984

ANDROBOT, INC.

TITLE: HOST DATA LINK DIGITAL

SIZE	CODE	NUMBER	REV
B		11-810233-001	E

DATE: 11/29/83 SHEET 2 OF 2

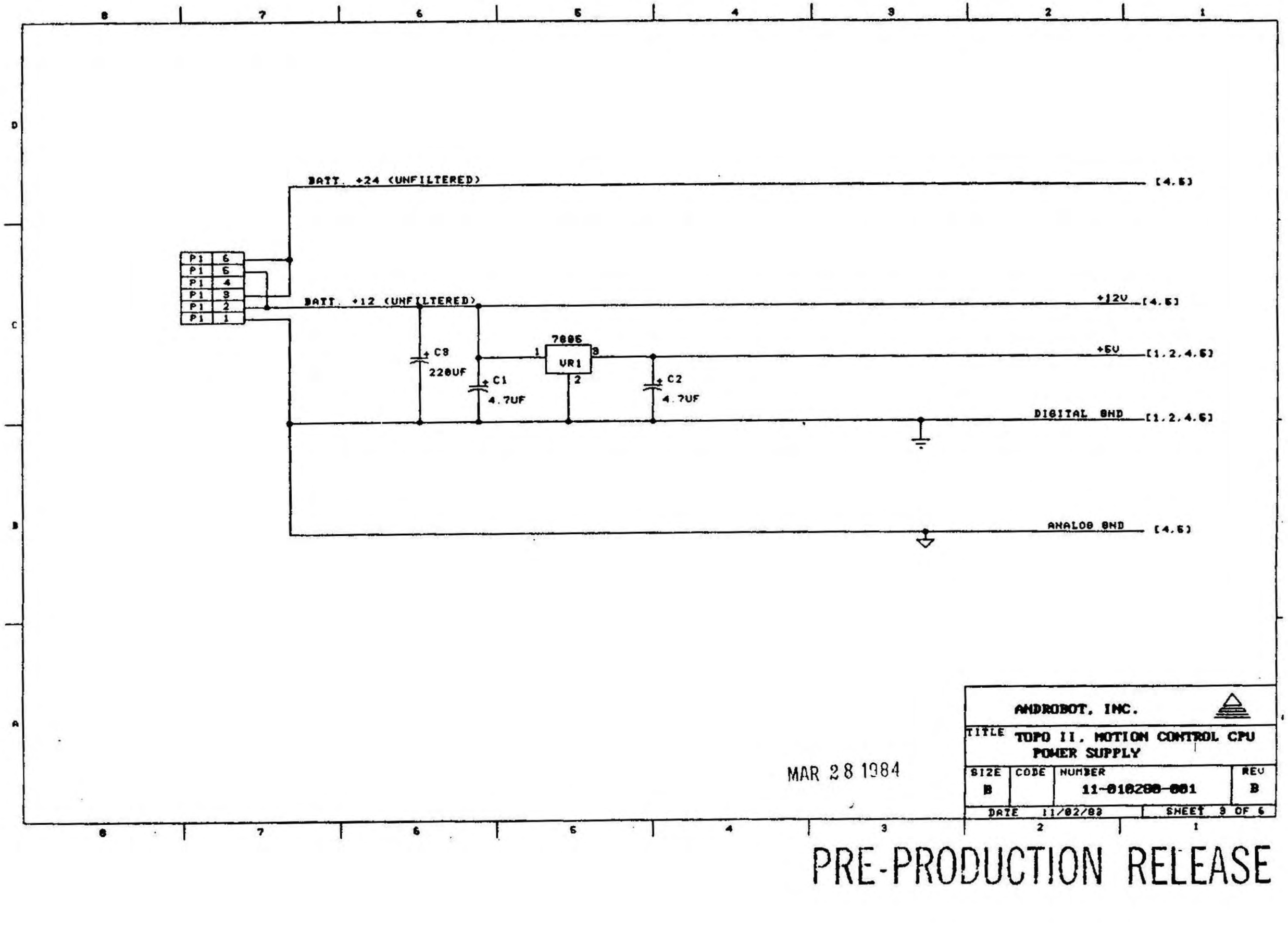

ANDROBOT, INC.

TITLE TOPO II, MOTION CONTROL CPU POWER SUPPLY

SIZE	CODE	NUMBER	REV
B		11-010288-001	B

DATE 11/02/83 SHEET 3 OF 6

MAR 28 1984

PRE-PRODUCTION RELEASE

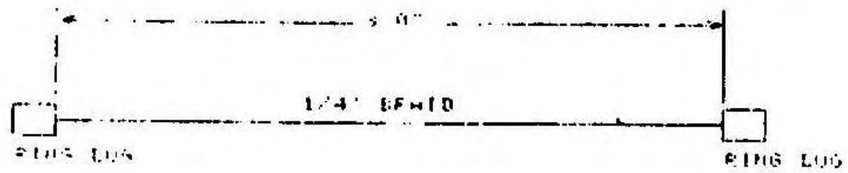

ANDROBOT, INC.			
TITLE: TOPO II CAGE/CHASSIS GROUND STRAP			
SIZE: B	CODE:	NUMBER: 15-810829-001	REV: A
		SHEET 1 OF 1	

REVISIONS				
ZONE	LTR	DESCRIPTION	DATE	APVD

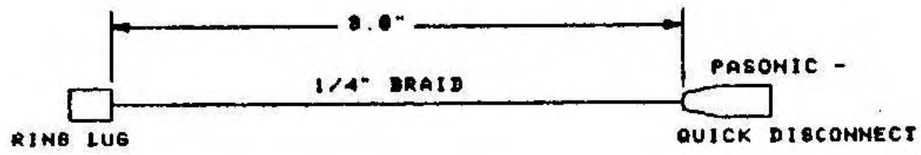

DATE	10/19/03
DWN	T. SAKAMOTO
APVD	
APVD	
ENGR6	
CHKR	

ANDROBOT, INC.

TITLE: TOPO II
BATTERY GROUND STRAP

SIZE	CODE	NUMBER	REV
B		15-01830-001	A

SHEET 1 OF 1

REVISIONS			
LTR	DESCRIPTION	DATE	APVD
A	PRE-PROD ECO 00015	10/21/83	L.H.
B	REVISED ECO 00032	11/08/83	L.H.
C	REVISED ECO 00068	12/09/83	L.H.
D	REVISED ECO 00072	12/16/83	L.H.
E	REVISED ECO 00078	12/20/83	

IC TABLE

IC TYPE	REF. DES.	+9V	+10	+5V	GND	+24	+12
4011	U2			14	07		
4071	U3			14	07		
74LS132	U11			14	07		
74LS14	U1			14	07		
74LS378	U6			20	10		
2764	U10			28	14		
8031-A	U7			40	20		
8155	U5			40	20		
TL072	U8		08		04		
LM384	U4		14		7.9, 10.4		
555	U9				01		
LM317T	VR1	VOUT				VIN	
LM317T	VR3		VOUT			VIN	
LM7806	VR2			03	02		01
LM317LZ	VR4		VIN				

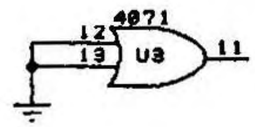

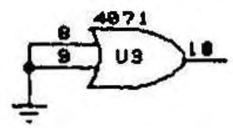

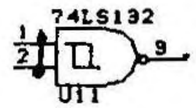

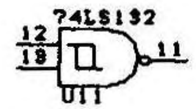

NOTES

1. 0.1uF BYPASS CAPS ARE C11-C19,C22,C29,C41,C44.
2. OPTIONAL PARTS FOR U1 ARE: 74HC14 OR MC14584 HOWEVER IF A 14584 IS USED THE AUTO-TESTER CANNOT BE USED TO TEST ALL FUNCTIONS OF THE BOARD.
3. IF EITHER OPTIONAL PART IS USED IN U1 THEN R1 MUST BE INSTALLED. (SEE SHT.#6)

PRE-PRODUCTION RELEASE

MAR 28 1984

DATE	12/20/83
DWN	J. YOUNG
APVD	
APVD	
ENGRG	
CHKR	

ANDROBOT, INC.

TITLE: TOPO II COMMUNICATION BD
MAIN CPU UNUSED GATES, IC LIST

SIZE	CODE	NUMBER	REV
B		11-018281-001	E

SHEET 1 OF 1

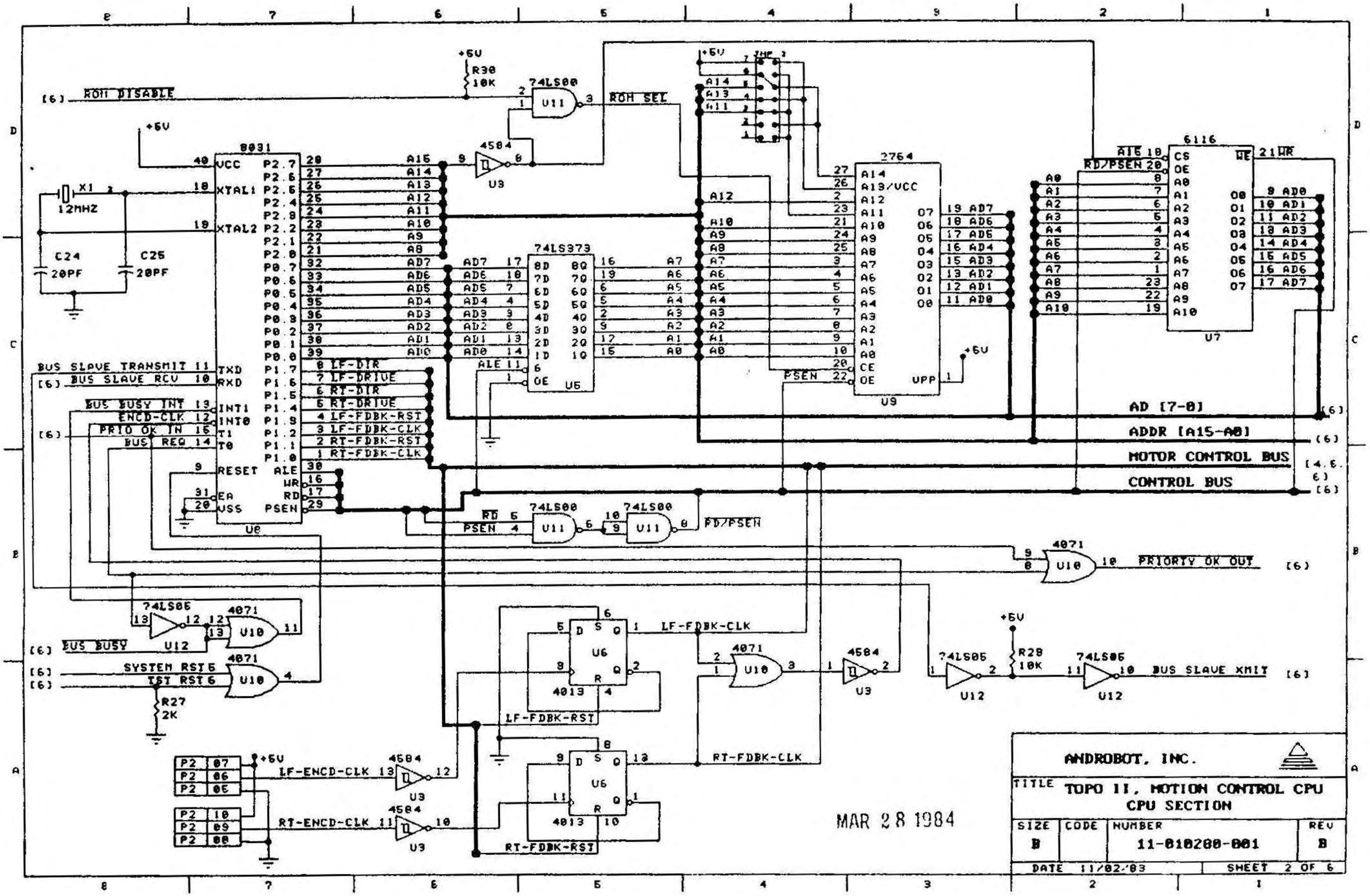

PRE-PRODUCTION RELEASE

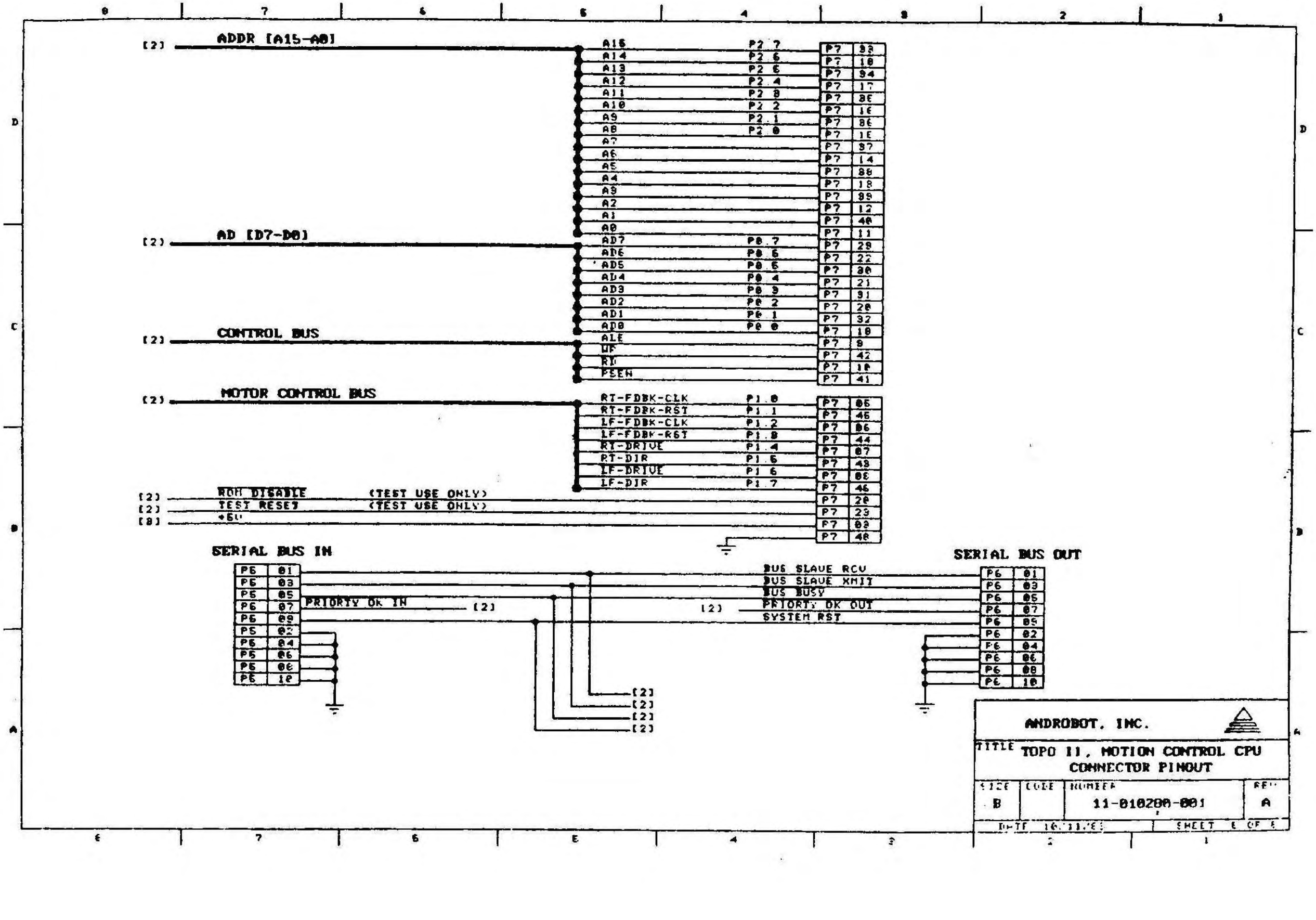
ADDR [A15-A8]
[2]
A15
A14
A13
A12
A11
A10
A9
A8
A7
A6
A5
A4
A3
A2
A1
A0
P2.7
P2.6
P2.5
P2.4
P2.3
P2.2
P2.1
P2.0
AD [D7-D0]
[2]
AD7
AD6
AD5
AD4
AD3
AD2
AD1
AD0
P0.7
P0.6
P0.5
P0.4
P0.3
P0.2
P0.1
P0.0
CONTROL BUS
[2]
ALE
WR
RD
PSEN
MOTOR CONTROL BUS
[2]
RT-FDBK-CLK
RT-FDBK-RST
LF-FDBK-CLK
LF-FDBK-RST
RT-DRIVE
RT-DIR
LF-DRIVE
LF-DIR
P1.0
P1.1
P1.2
P1.3
P1.4
P1.5
P1.6
P1.7
P7 35
P7 10
P7 34
P7 17
P7 3E
P7 1E
P7 3E
P7 1E
P7 37
P7 14
P7 36
P7 18
P7 39
P7 12
P7 40
P7 11
P7 29
P7 22
P7 30
P7 21
P7 31
P7 20
P7 32
P7 10
P7 9
P7 42
P7 10
P7 41
P7 05
P7 45
P7 06
P7 44
P7 07
P7 43
P7 08
P7 46
P7 20
P7 23
P7 02
P7 48
[2] ROM DISABLE (TEST USE ONLY)
[2] TEST RESET (TEST USE ONLY)
[8] +5V
SERIAL BUS IN
P6 01
P6 03
P6 05
P6 07
P6 09
P6 02
P6 04
P6 06
P6 08
P6 10
PRIORITY OK IN
[2]
[2]
[2]
[2]
[2]
SERIAL BUS OUT
BUS SLAVE RCV
BUS SLAVE XMIT
BUS BUSY
PRIORITY OK OUT
SYSTEM RST
[2]
P6 01
P6 03
P6 05
P6 07
P6 09
P6 02
P6 04
P6 06
P6 08
P6 10
ANDROBOT, INC.
TITLE TOPO II, MOTION CONTROL CPU CONNECTOR PINOUT
SIZE B
CODE
NUMBER 11-010200-001
REV A
DATE 16-11-83
SHEET 6 OF 6

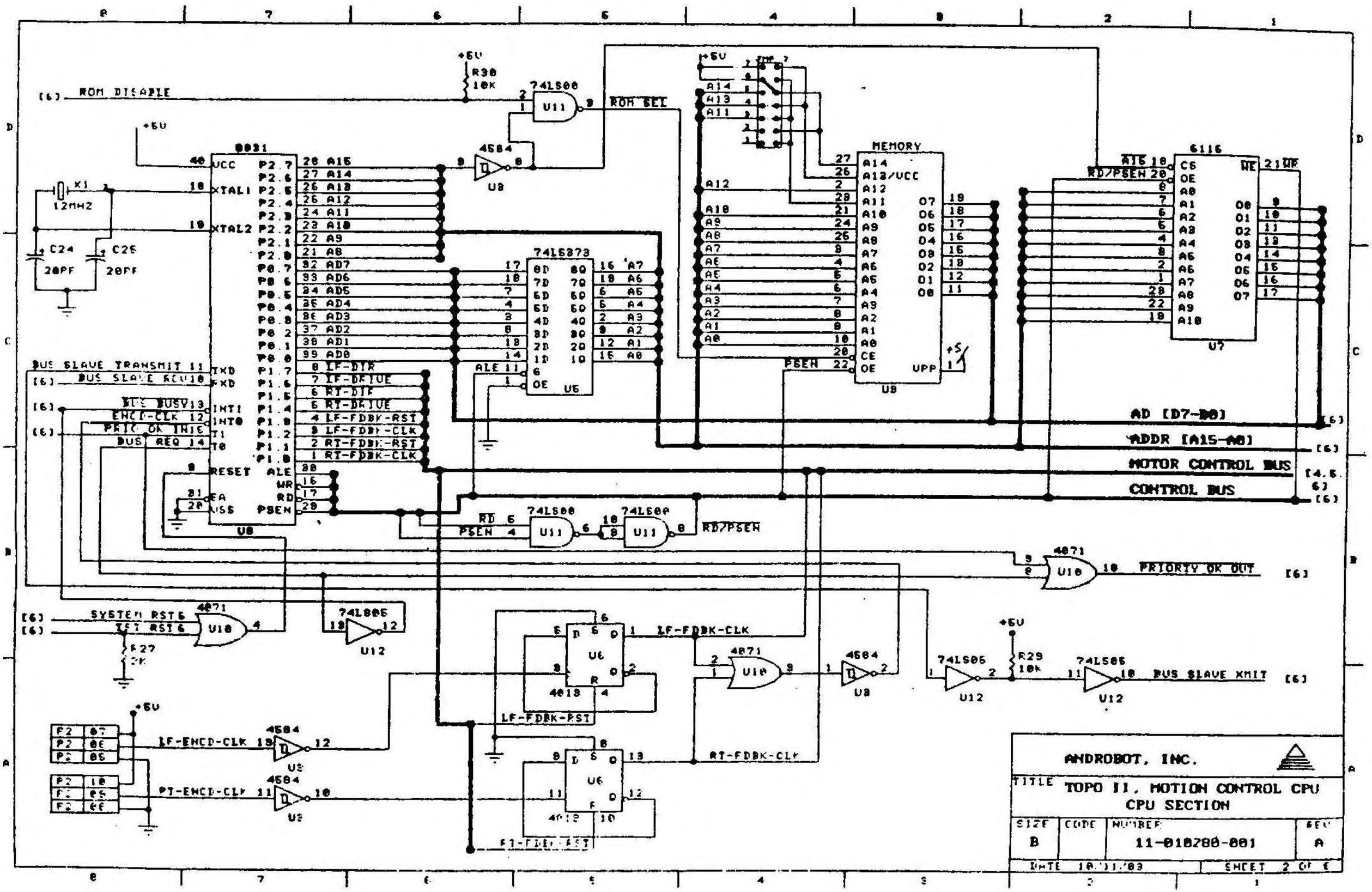

ANDROBOT, INC.

TITLE	TOPO II, MOTION CONTROL CPU CPU SECTION		
SIZE B	CODE	NUMBER 11-010288-001	REV A
DATE 10/11/83		SHEET 2 OF 6	

REVISIONS			
LTR	DESCRIPTION	DATE	APVD
A	PRE-PROD REL ECO 00015	10/21/83	L H
B	REVISIE ECO 00060	01/17/84	
C	ECO 00091	1/30/84	JC

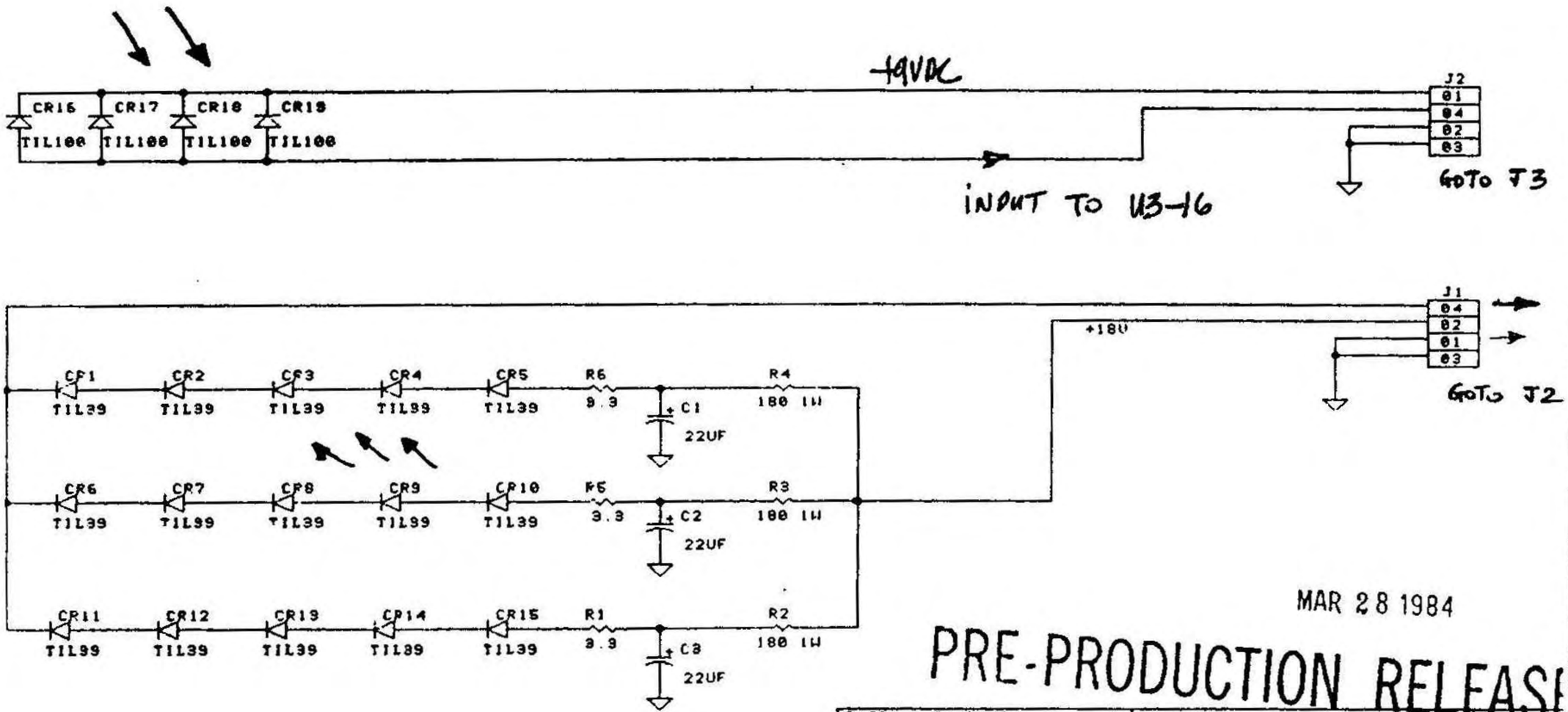

MAR 28 1984

PRE-PRODUCTION RELEASE

DATE	01/30/84
DWN	J YOUNG
APVD	
APVD	
ENGR	
CHKR	

ANDROBOT, INC.

TITLE: MOBILE TRANCEIVER SENSOR

SIZE	CODE	NUMBER	REV
B		11-010369-001	C

SHEET 1 OF 1

RT FWRD — P2 | 18
RT REV — P2 | 12
L+12V — P2 | 11
P2 | 14

+24V
C6 100UF
9636A
SRC
SNK
OUT
Q3
CR5 IN4004
CR7 IN4004
R9 91K
+5V
LM324
U2
CR10 IN914
R5 9.1K
.01UF C9
R3 0.1
R10 10K

RIGHT.

P4 | 1
P4 | 2

M

+24V
C7 100UF
9636A
SRC
SNK
OUT
Q4
CR6 IN4004
CR8 IN4004
R8 91K
LM324
U2
CR8 IN914
TPX2
R6 9.1K
.01UF C8
R4 0.1
R7 10K

(2) RY-DIR — 4071 U4 — 4584 U9

(2) RY-DRIVE — 4071 U4

+5V
R28 12K
C12 4.7UF
R18 3.9K
R12 11K
R14 2K
LM824
U2
R11 99K

MAR 28 1984

ANDROBOT, INC.

TITLE	TOPO II, MOTION CONTROL CPU MOTOR DRIVE CIRCUIT #1		
SIZE	CODE	NUMBER	REV
B		11-016200-001	B
DATE 11/02/83		SHEET 4 OF 6	

PRE-PRODUCTION RELEAS

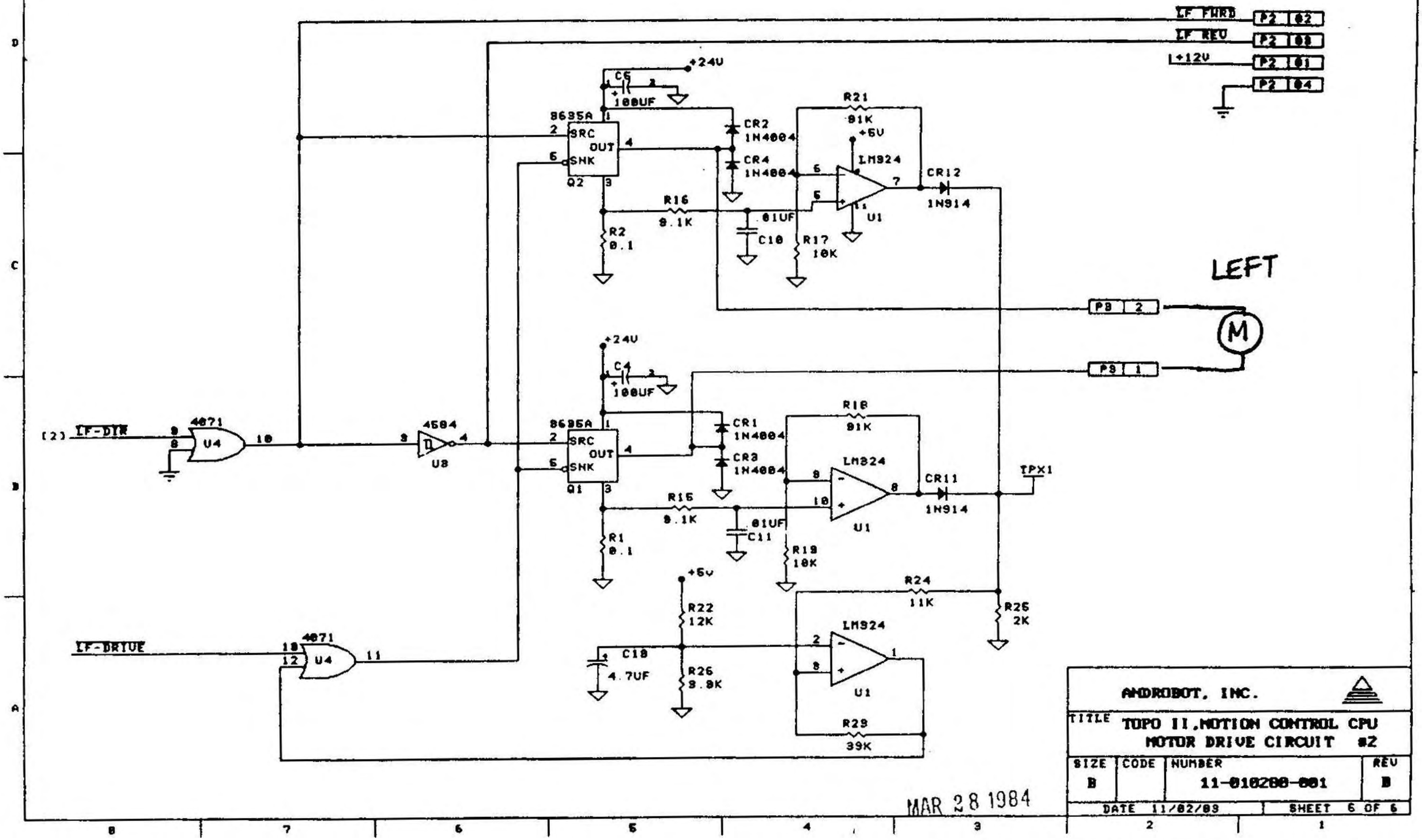

ANDROBOT, INC.

TITLE TOPO II, MOTION CONTROL CPU
MOTOR DRIVE CIRCUIT #2

SIZE	CODE	NUMBER	REV
B		11-010200-001	B

DATE 11/02/83 | SHEET 6 OF 6

MAR 28 1984

PRE-PRODUCTION RELEASE

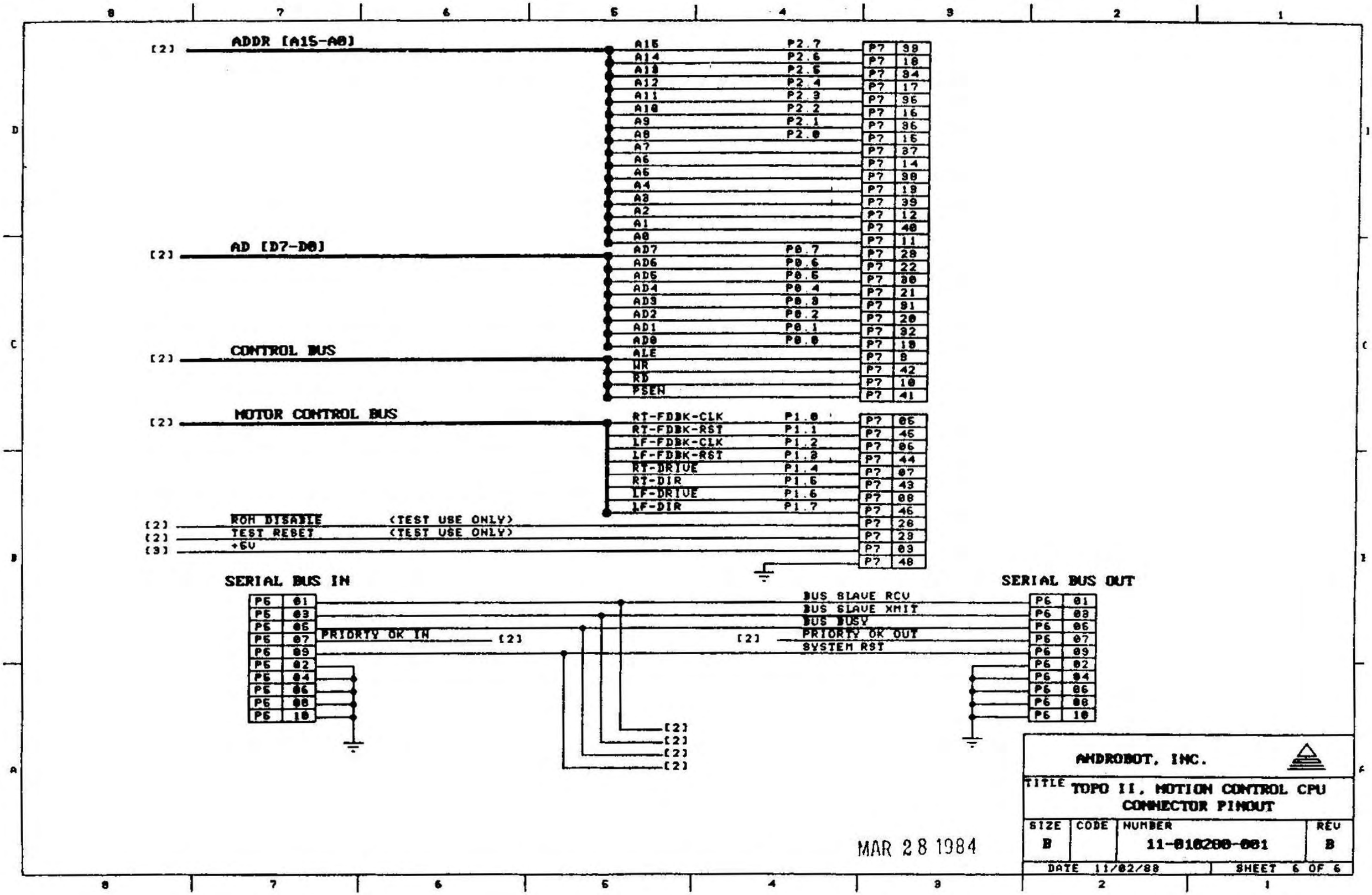

PRE-PRODUCTION RELE

REVISIONS			
LTR	DESCRIPTION	DATE	APPVD
A	PRE-PROD REL, ECO 00019	10/21	[illegible]

IC TABLE

IC TYPE	REF DESIGNATOR	QTY	+5V	GND	-5V	+12	+24
8031	U8	1	40	20			
2764	U9	1	28	14			
6116	U7	1	24	12			
4013	U6	1	14	07			
4071	U4.U10	2	14	07			
4504	U3	1	14	07			
74LS00	U11	1	14	07			
74LS05	U12	1	14	07			
74LS373	U5	1	20	10			
LM324	U1.U2	2	04	11			
LM7805	VR1	1	08	02		01	
SG3695	Q1.Q2.Q3.Q4	4					01

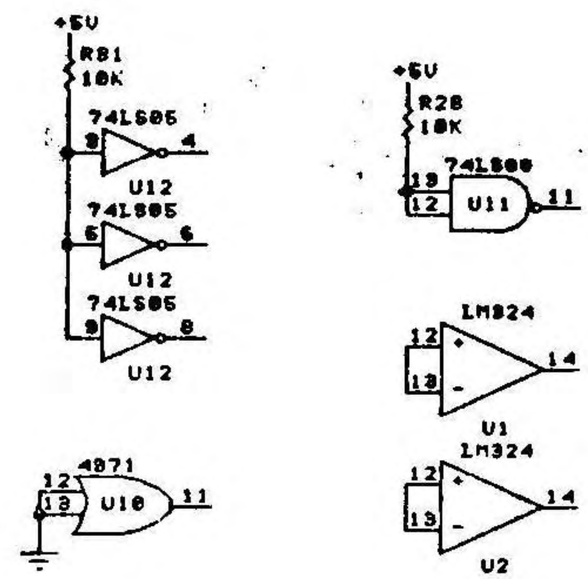

NOTE

1 ALL BYPASS CAPACITORS ARE 1UF IN VALUE.
2 DESIGNATORS FOR CAPS ARE C14 THRO C23.

DATE	10/21/83
DWN	
CHKD	[illegible]
APPD	
CHKD	
DX CHKD	

ANDROBOT, INC.

TITLE TOPO II, MOTION CONTROL CPU COVER SHEET

SIZE	CODE	NUMBER	REV
B		11-010280-001	A

DATE 10/11/83 SHEET 1 OF 6

REVISIONS				
ZONE	LTR	DESCRIPTION	DATE	APVD

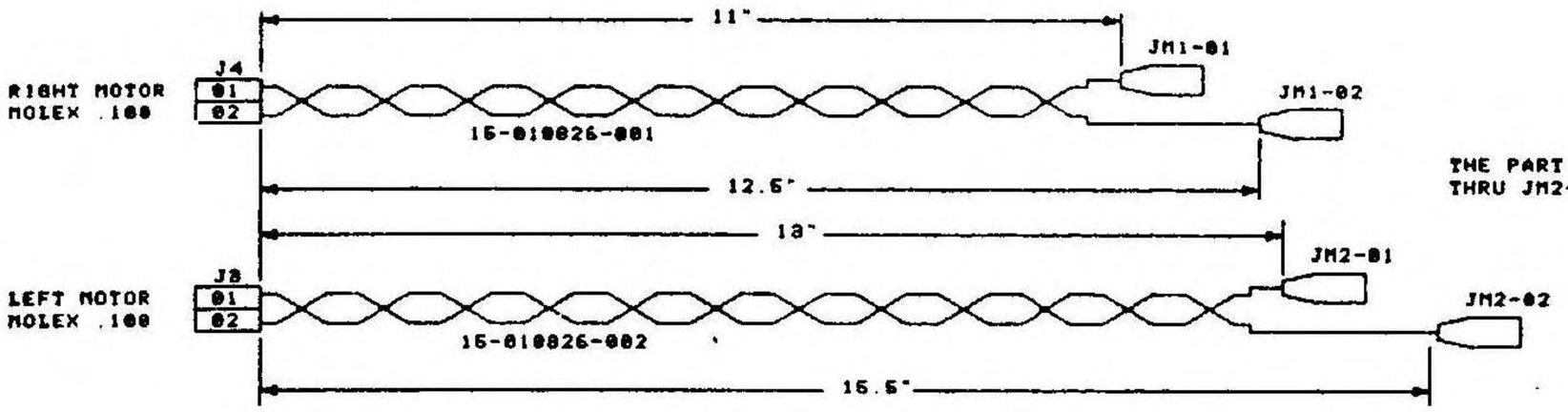

THE PART NUMBER FOR JM1-01 THRU JM2-02 IS DU18-198

WIRING NOTE

ITEM	DESIGNATOR	WIRE COLOR	LENGTH (IN.)	TERMINATION PT.	GUAGE
1	J4-01	RED	11.0	JM1-01	18
2	J4-02	BLACK	12.5	JM1-02	18
3	J3-01	RED	13.0	JM2-01	18
4	J3-02	BLACK	15.5	JM2-02	18

DATE	10/10/89
DWN	T SAKAMOTO
AFVD	
APVD	
ENGRG	
CHKR	

ANDROBOT, INC.

TITLE TOPO II
MOTOR HARNESS ASSEMBLY

SIZE	CODE	NUMBER	REV
B		15-010026-001,002	A

SHEET 1 OF

REVISIONS				
ZONE	LTR	DESCRIPTION	DATE	APVD
	A	PRE-PRODUCTION	11/21	

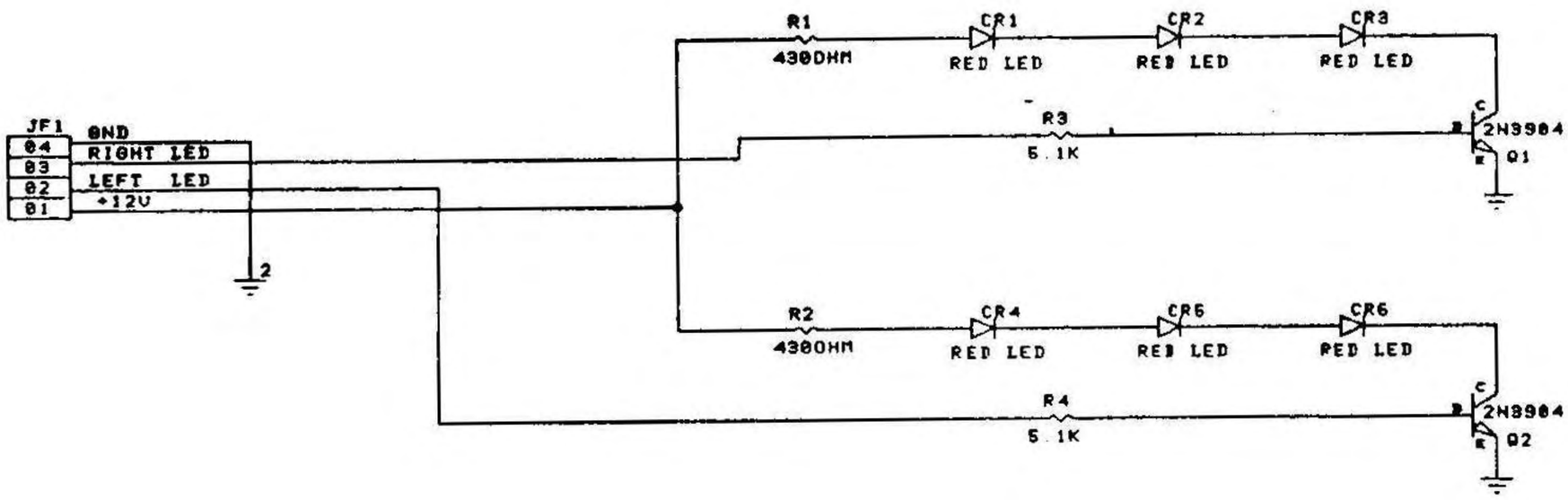

PRE-PRODUCTION RELEASE

MAR 28 1984

DATE	10/20/83
DWN	T. SAKAMOTO
APVD	
APVD	
ENGRG	
CHKR	

ANDROBOT, INC.

TITLE: TOPO II
FOOTLIGHT SCHEMATIC

SIZE	CODE	NUMBER	REV
B		11-810249-001	A

SHEET 1 OF 1

REVISIONS			
LTR	DESCRIPTION	DATE	APPVD
A	PRE-PROD REL, ECO 00019		
A1	ECO 00093		

REVISIONS				
ZONE	LTR	DESCRIPTION	DATE	APPVD
	A	[illegible]	[illegible]	
	A1	ECO 00163	[illegible]	

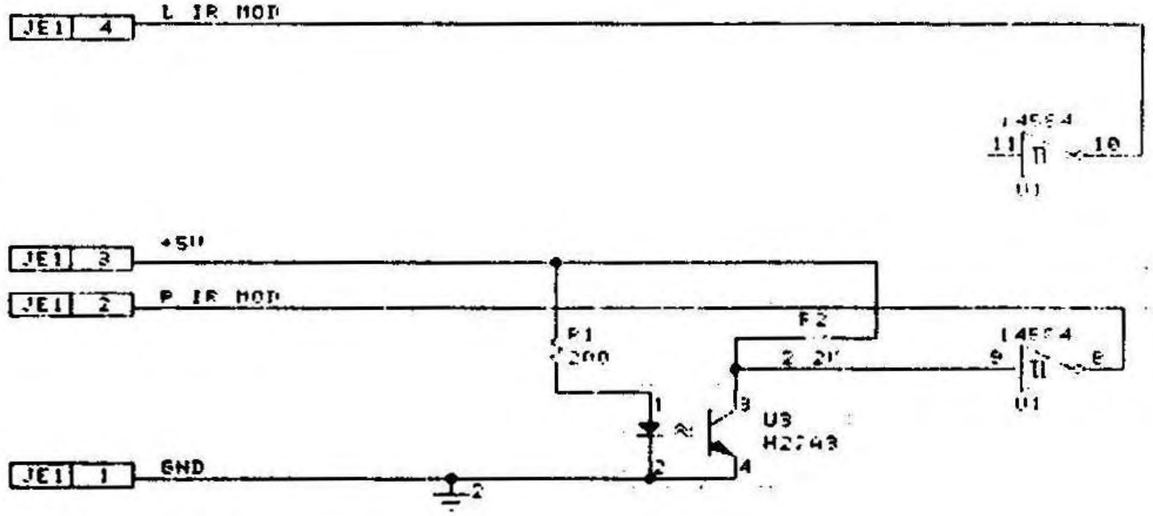

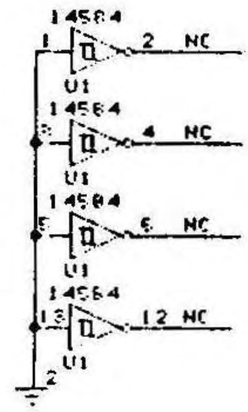

PRE-PRODUCTION RELEASE

MAR 28 1984

DATE	10/20/83
DRN	T YOUNG
APVD	
APVD	
ENGR	
CHKR	

ANDROBOT, INC.

TITLE: TOPO II
MOTOR ENCODER BRD.

SIZE	CODE	NUMBER	REV
B		11-810757-001	A

SHEET 1 OF

[2] **ADDR [A14-A0]**

A15	P5	33
A14	P5	10
A13	P5	34
A12	P5	17
A11	P5	35
A10	P5	16
A9	P5	36
A8	P5	15
A7	P5	37
A6	P5	14
A5	P5	38
A4	P5	13
A3	P5	39
A2	P5	12
A1	P5	40
A0	P5	11

[2] **AD [7-0]**

AD7	P5	28
AD6	P5	22
AD5	P5	30
AD4	P5	21
AD3	P5	31
AD2	P5	20
AD1	P5	32
AD0	P5	19

[2] **CONTROL BUS**

ALE	P5	9
WR	P5	42
RD	P5	10
PSEN	P5	41
TEST ROM	P5	28
TEST RESET	P5	23
IR AGC RST	P5	46
SYSTEM RST	P5	8
PRIORITY OK	P5	43
LOOP BACK	P5	7
SPTST	P5	44
DTR	P5	6
ECHO RST	P5	45
SPEECH EN	P5	5
+18V	P5	1
+9V	P5	2
+5V	P5	3
-5V	P5	50
GND	P5	48

[2] **LOCAL RS232 BUS**

SYSTEM RST	P4	09
BUS MSTR RCV	P4	03
BUS BUSY	P4	05
PRIORITY OK	P4	07
BUS MSTR XMIT	P4	01
	P4	10
	P4	02
	P4	04
	P4	06
	P4	08

EDit CONNECTOR SPARE !

GOTO MOTION CONTROL P.C.B.

MAR 28 1984

PRE-PRODUCTION RELEASE

ANDROBOT, INC.

TITLE: TOPO II COMMUNICATION I
SERIAL BUS & TEST CONN. PINOU

SIZE	CODE	NUMBER	REV
B		11-818281-001	A

DATE 12/28/83 SHEET 5 OF

RECEIVERS

+12V
CR22
1N914
C9
4.7uF
CR18 CR19 CR20 CR21
TIL100 TIL100 TIL100 TIL100
C14
L1
220000uH
C11
.01uF
R17
6.2K
R27
39K
U3 CA3280
C10
1uF TANT
R18
10K
R19
100
L2
100000uH
R28
10K
U3 CA3280
C15
100uF
6.3V
R21
10K
C12
240pF
R8
20K
C8
68pF
C7
.0 1uF
+12V
+5V
U1 LM393
R11
2K
P1
03
IR RXD

P1
07
AGC RESET

P1
02
04
06
09

P1
01
+12V
C1
4.7uF

P1
10
+5V
C3
4.7uF

P1
08
IR TXD

P1
05
C2
4.7uF

+5V
R6
150
CR9
HLMP3301
RED LED

+12V
VR1 78L05
P29
100
C6
4.7uF
TANT

R13
100
P14
7K
C13
680pF
2N4401
Q2

U2 CA3096
+12V
CR26
1N914
CR25
1N914
R10
360
R12
18K
R9
22M

+12V
U2 CA3096
U2 CA3096
R22
1M
R20
4.7K
U2 CA3096
LM393
U1

IR LEDS
1/4W
100Ω
+12V
22μF
100Ω
2N5305

LTR	DESCRIPTION
A	PER-PROD REL
A 1	REVISED ECO

ANDROBOT, INC.

TITLE
T DATA LINK ANALOG

SIZE	CODE	NUMBER	REV
B		11-818598-881	A.1

DATE 12/28/89 SHEET 1 OF

PRE-PRODUCTION RELEASE

(X) CUT OPEN

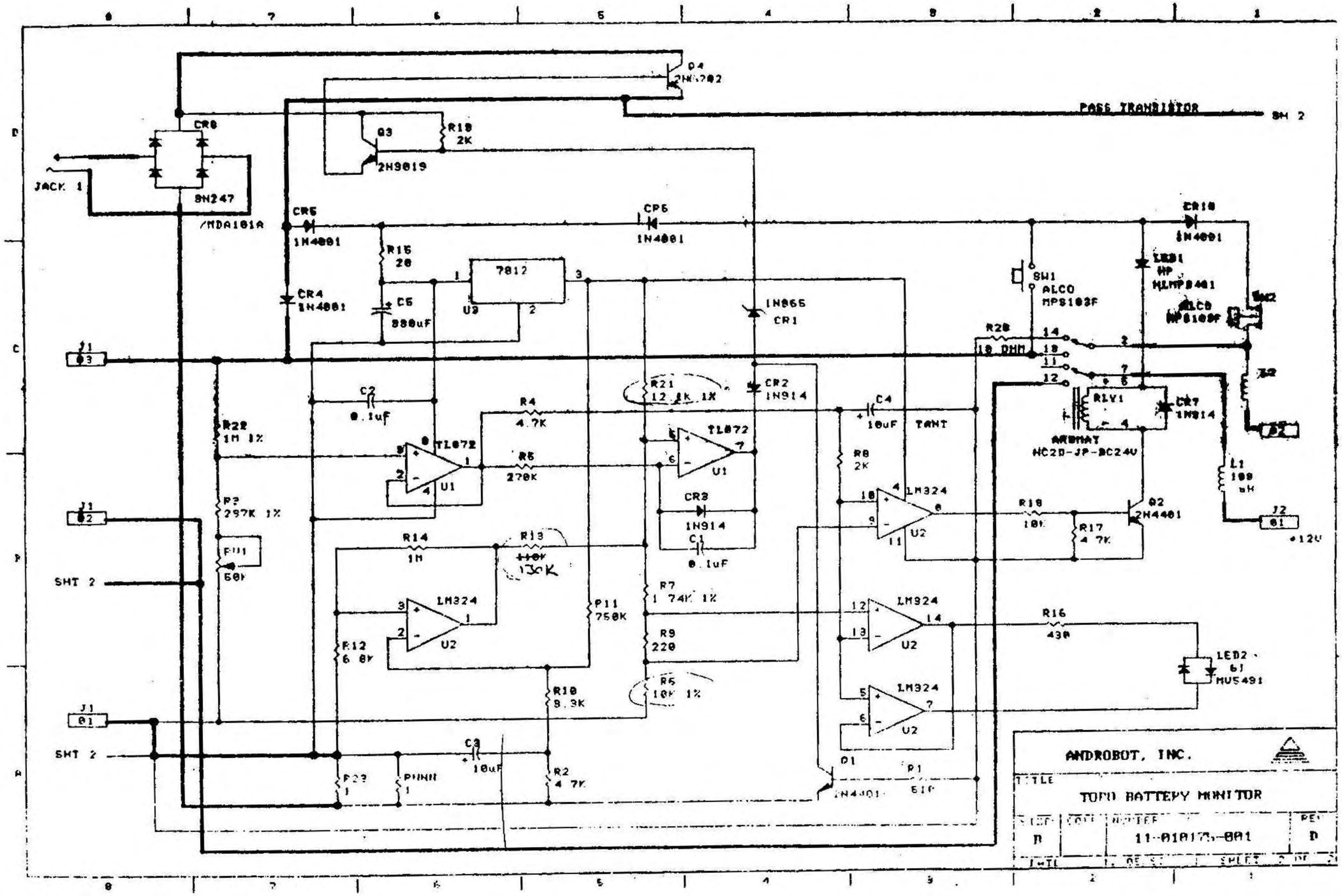

PASS TRANSISTOR
SH 2
JACK 1
SN247
/MDA101A
CR8
CR5
1N4001
CR4
1N4001
CR6
1N4001
CR10
1N4001
Q4
2N6702
Q3
2N3019
R19
2K
R15
20
C5
880uF
7812
U3
1N965
CR1
CR2
1N914
CR3
1N914
C1
0.1uF
C2
0.1uF
R4
4.7K
R5
270K
R21
12.1K 1%
TL072
U1
R22
1M 1%
R3
297K 1%
PU1
50K
R14
1M
R13
130K
LM324
U2
R12
6.8K
R11
750K
R10
8.3K
R7
1.74K 1%
R9
220
R6
10K 1%
C3
10uF
R23
1
PUNN
1
R2
4.7K
C4
10uF
TANT
R8
2K
R18
10K
R17
4.7K
Q2
2N4401
R16
430
LED2
61
MU5491
Q1
2N4401
R1
510
SW1
ALCO
MPS103F
LED1
HP
HLMP8401
ALCO
MPS103F
R20
10 OHM
RLV1
ARDMAT
HC2D-JP-DC24V
CR7
1N914
L1
100
uH
J2
01
+12V
J1
03
J1
02
J1
01
SHT 2
SHT 2
ANDROBOT, INC.
TITLE
TOPO BATTERY MONITOR
SIZE
D
NUMBER
11-010175-001
REV
D

error code	cause
1100	Can't write and read one byte of value 0 at ram address 0.
1101	Can't write and read a value 1 in bit 0 addrs 0
1102	Can't write and read a value 1 in bit 1 addrs 0
1103	Can't write and read a value 1 in bit 2 addrs 0
1104	Can't write and read a value 1 in bit 3 addrs 0
1105	Can't write and read a value 1 in bit 4 addrs 0
1106	Can't write and read a value 1 in bit 5 addrs 0
1107	Can't write and read a value 1 in bit 6 addrs 0
1108	Can't write and read a value 1 in bit 7 addrs 0
1110	Can't write and read a pattern into/out of ram at addresses 0-FFH.
1111	Can't read the previous pattern back from ram addresses 0-FFH.
2001	All odd bytes are of value 0.
2002	All even bytes are of value 0.
3101	The pull-ups on ports B & C look like grounds.
3102	The ports A and C report something other than value 0 when port B is output with value 0.
3103	The ports A and C report something other than the test pattern output on port B.
3104	The ports A and B report something other than value 0 when port C is output with value 0.
3105	The ports A and B report something other than the test pattern output on port C.

COMMUNICATION BOARD TEST
NUMBER DEFINITIONS

23 MAY 1984

error code	cause
1100	Can't write and read one byte of value 0 at ram address 0.
1101	Can't write and read a value 1 in bit 0 addrs 0
1102	Can't write and read a value 1 in bit 1 addrs 0
1103	Can't write and read a value 1 in bit 2 addrs 0
1104	Can't write and read a value 1 in bit 3 addrs 0
1105	Can't write and read a value 1 in bit 4 addrs 0
1106	Can't write and read a value 1 in bit 5 addrs 0
1107	Can't write and read a value 1 in bit 6 addrs 0
1108	Can't write and read a value 1 in bit 7 addrs 0
1110	Can't write and read a pattern into/out of ram at addresses 0-FFH.
1111	Can't read the previous pattern back from ram addresses 0-FFH.
2001	All odd bytes are of value 0.
2002	All even bytes are of value 0.
3101	The pull-ups on ports B & C look like grounds.
3102	The ports A and C report something other than value 0 when port B is output with value 0.
3103	The ports A and C report something other than the test pattern output on port B.
3104	The ports A and B report something other than value 0 when port C is output with value 0.
3105	The ports A and B report something other than the test pattern output on port C.

COMMUNICATION BOARD TEST
NUMBER DEFINITIONS

23 MAY 1984

ANDROBOT TOPO I/O

(Corrected)

Solder Side

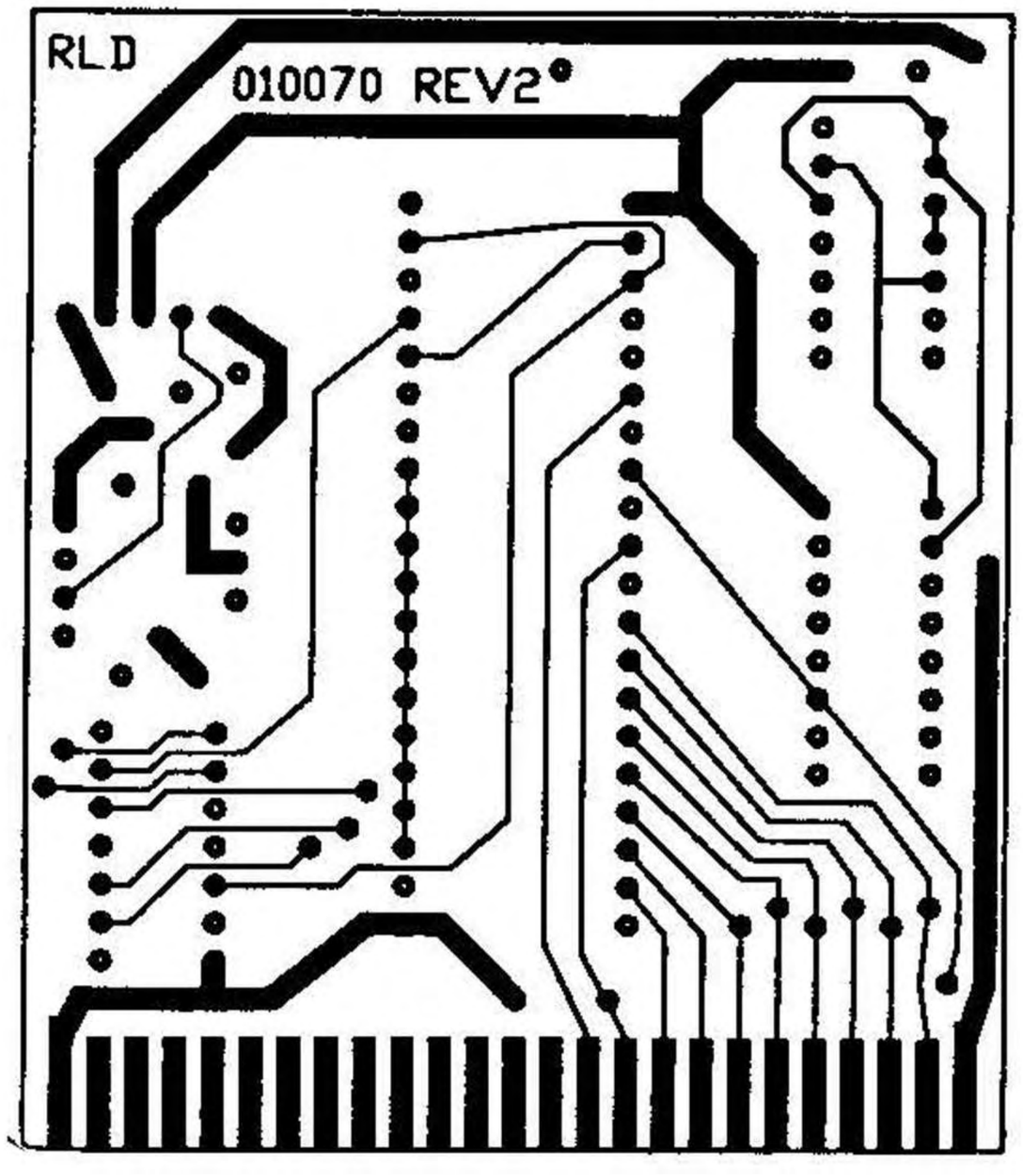
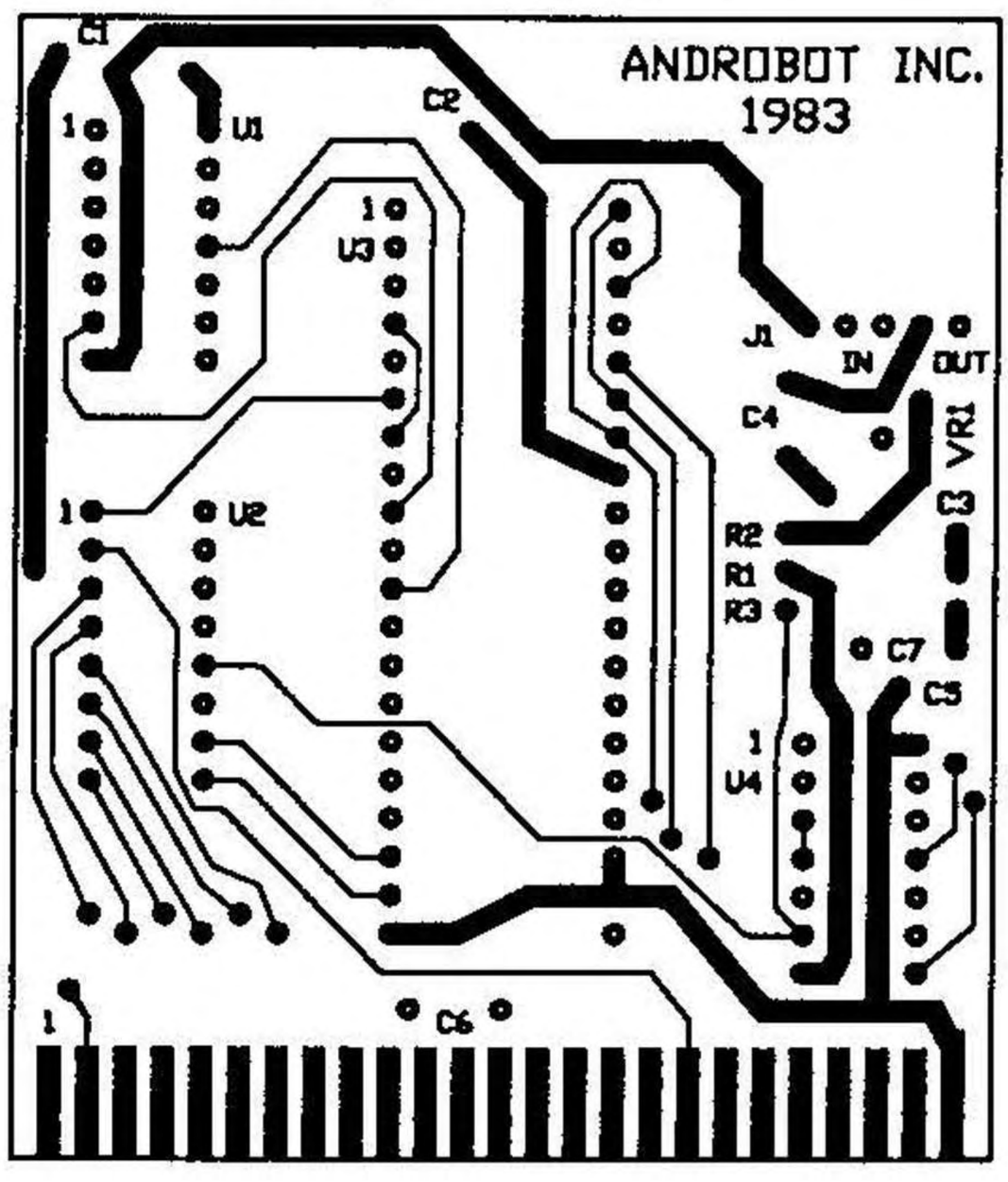
Component Side